THOMSON DTH-4000

MODEL

SERVICE MANUAL

Abbreviations - Abreviations - Abkürzungen - Abbreviazioni - Abreviaciones

AC	Alternative Current
AGC	Automatic Gain Control
ALPC	Automatic Laser Power Control
CD	Compact Disc
CLV	Constant Linear Velocity
CSS	Contents Scramble System
DTS	Digital Theater System
DVD	Digital Versatile Disc
EFM	Eight to Fourteen Modulation
EQ	Equalizer
FE	Focusing Error
FG	Frequency Generator
LD	Laser Diode
LPCM	Linear Pulse Code Modulation
MIRR	Mirror
MPEG	Moving Picture Expert Group
PCB	Printed Circuit Board
PLL	Phase Locked Loop
PWM	Pulse Width Modulation
RF	Radio Frequency
S/N	Signal to Noise
SMPS	Switching Mode Power Supply
TE	Tracking Error
TZC	Track Zero Cross
VBR	Variable Bit Rate

ADJUSTMENT PROCEDURES

2. Pickup Disassembly and Assembly

2-1 Disassembly

1) Remove the power cable.
2) Switch SW3 (on Deck PCB) to "OFF" before disconnecting the flat cable (DCN1 inserted into Main PCB see Fig. 1-4).
3) Remove the deck.
4) Remove the deck PCB.

2-2 Assembly

1) Replace the Pickup.
2) Refit the deck PCB.
3) Refit the deck.
4) Insert flat cable into DCN1 (Main PCB) and switch SW3 (on deck PCB) to "ON". (see Fig. 1-4)

Note : If the assembly and disassembly are not done in correct sequence, the Pickup may be damaged.

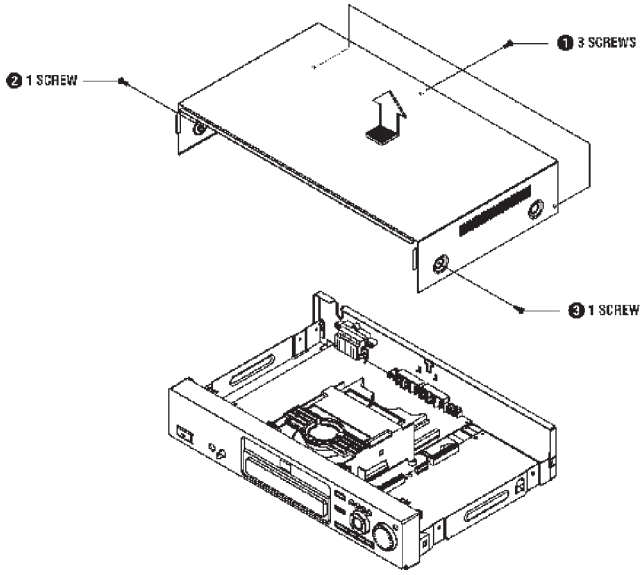

Fig. 3-1-1

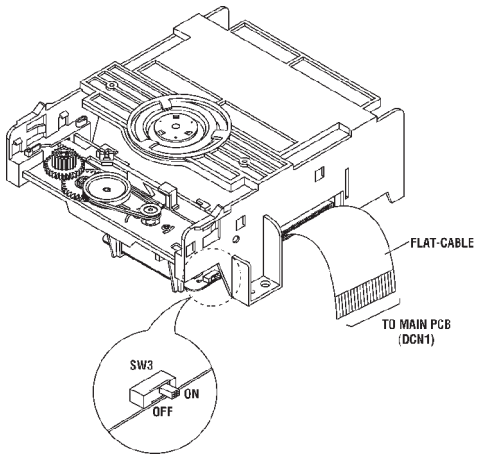

Fig. 1-4

3. Disassembly and Assembly

3-1 Cabinet and PCB

Note : Reassemble in reverse order.

3-1-1 Removing the Top Cabinet

1) Remove 3 screws ❶ on the back of the Top Cabinet.
2) Remove the 2 screws ❷ on the left side and ❸ on the right side.
3) Lift the Top Cabinet up in the direction of the arrow.

3-1-2 Removing the Door-Tray

1) Switch the power on and open Tray ❶.
2) Pull Door-Tray ❷ in direction of arrow "A".
3) Close Tray ❶ and Switch the power off.

Note : If Tray ❶ cannot be opened, insert a Screw driver ❹ into Emergency hole ❸ (as shown in detailed drawing) and then turn it in the direction of arrow "B". Open the Tray manually.

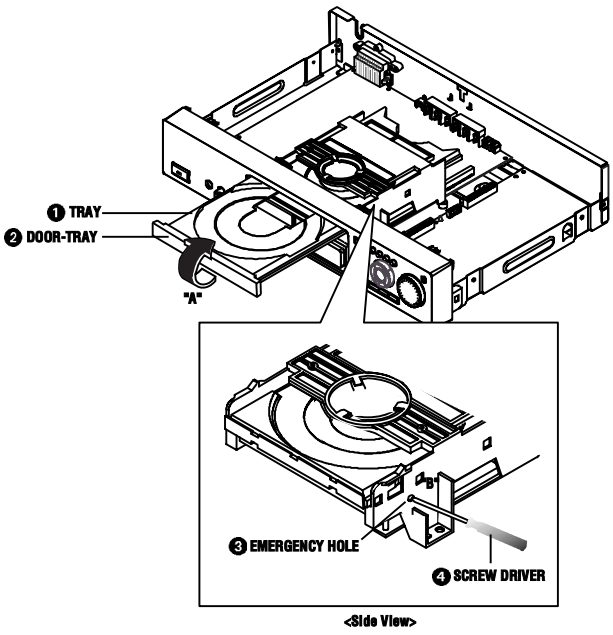

Fig. 3-1-2

3-1-3 Removing the Front-Panel Assembly and Key PCB

1) Remove Knob-Volume ❶ and Knob-Shuttle ❷
2) Remove Front-Panel Assembly ❸.
3) Remove 5 screws ❹ and Ground Rear ❺.
4) Remove Key PCB ❻.

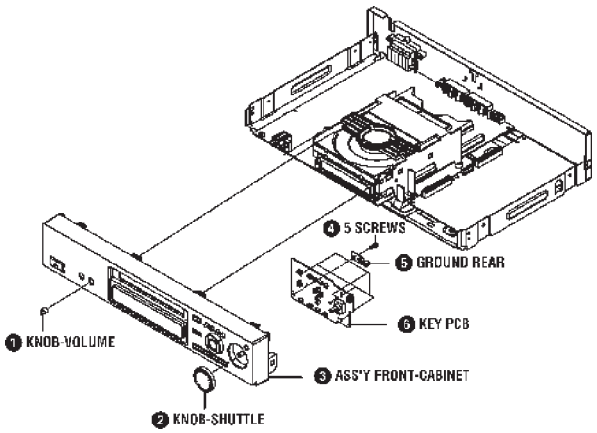

Fig. 3-1-3

3-1-4 Removing the Deck Assembly

1) Remove 4 Screws ❶ from the Assembly Deck and lift it up.

CAUTION :

a) When disassembling, switch SW3 to "OFF" on the Deck PCB and remove the Flat-Cable connected to DCN1 on Main PCB.

b) When assembling, insert the Flat-Cable into the DCN1 on Main PCB and switch SW3 to "ON" on the Deck PCB.

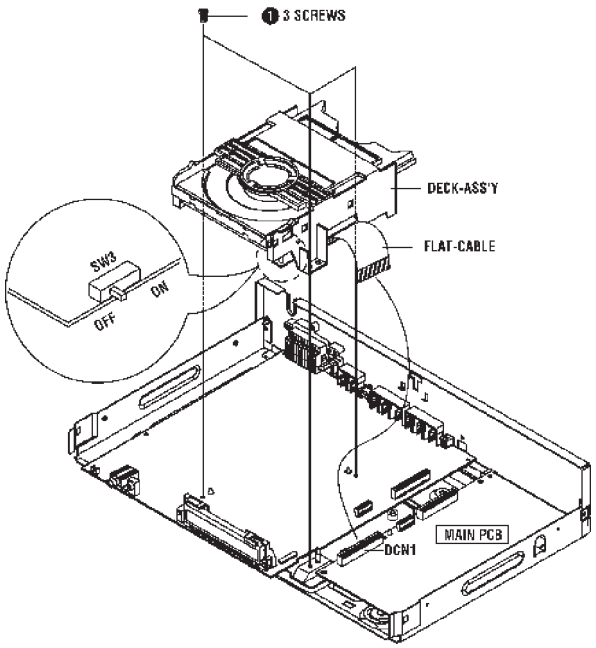

Fig. 3-1-4

3-1-5 Removing Main PCB and Jack PCB

1) Remove 1 Screw ❶.
2) Remove 2 screws ❷ and lift Jack PCB ❸ up.
3) Remove 3 screws ❹ and lift Main PCB ❺ up.

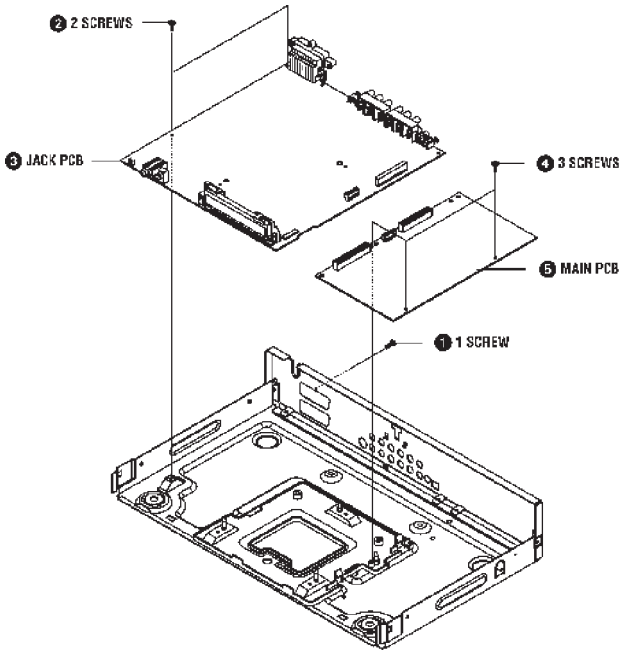

Fig. 3-1-5

3-2 PCB Location

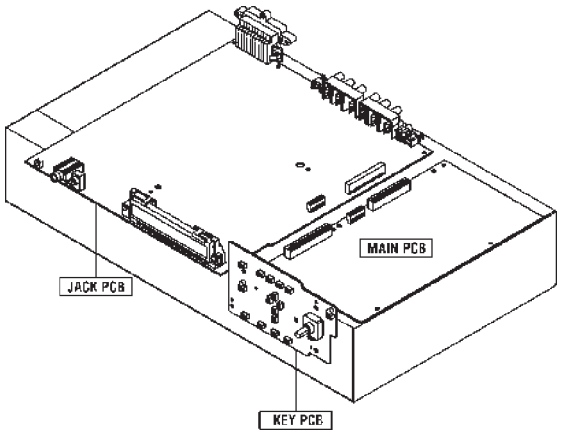

Fig. 3-2

3-3 Deck

3-3-1 Removing PCB Deck Assembly, P/U Deck

1) Remove the soldering of SLED+, SLED- ❶ and TM+, TM- ❷.
2) Disconnect CN3 ❸, CN2 ❹.
3) Remove 1 Screw ❺ and lift the PCB Deck ❻ up.
4) Remove 1 Screw ❼.
5) Push the Hook ❽ in the direction of arrow "A" and lift the P/U Deck Assembly ❾ up in the direction of arrow "B".

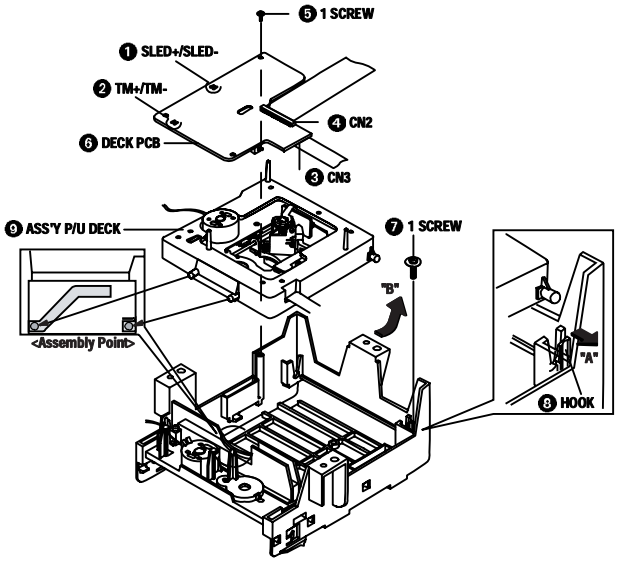

Fig. 3-3-1

3-3-2 Removing the Tray Disc

1) Insert Screw Driver ❶ into Emergency Hole ❷ and push Sider Housing ❸ in the direction of arrow "A".
2) When Tray Disc ❹ comes out little, pull it in the direction of arrow "B" by hand.
3) Pull Tray Disc ❹ to disassemble, while pushing 2 Stoppers ❺ (left, right) in the direction of arrow "C" and "D" simultaneously.

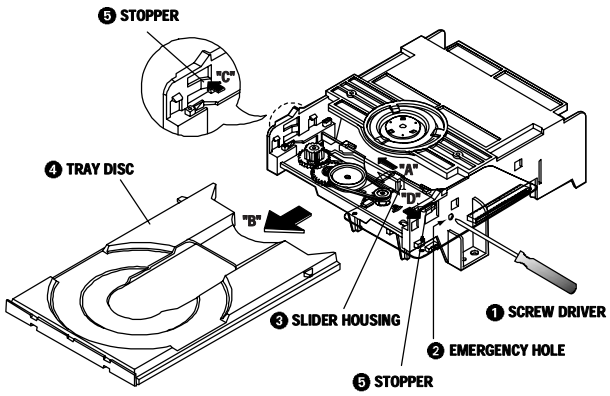

Fig. 3-3-2

3-3-3 Removing Slider Housing

1) Push Slider Housing ❶ in the direction of arrow "A".
2) Lift Slider Housing ❷ up.

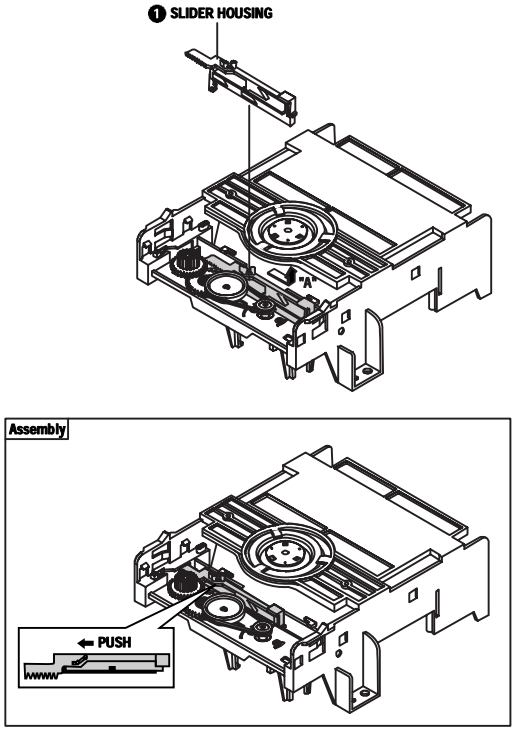

Fig. 3-3-3

3-3-4 Removing Housing Assembly

1) Remove Belt ❶ and 1 Screw ❷.
2) Remove 1 screw ❸ and lift the Pulley Gear ❹ up.
3) Push Hook ❺ in the direction of arrow "A" and lift the Gear Tray ❻ and the Gear Housing ❼ up.
4) Push the 4 Hooks ❽ bottom side in the direction of arrow "B" and lift the Motor Load Assembly ❾ up.
5) Remove Clamper Assembly ❿.

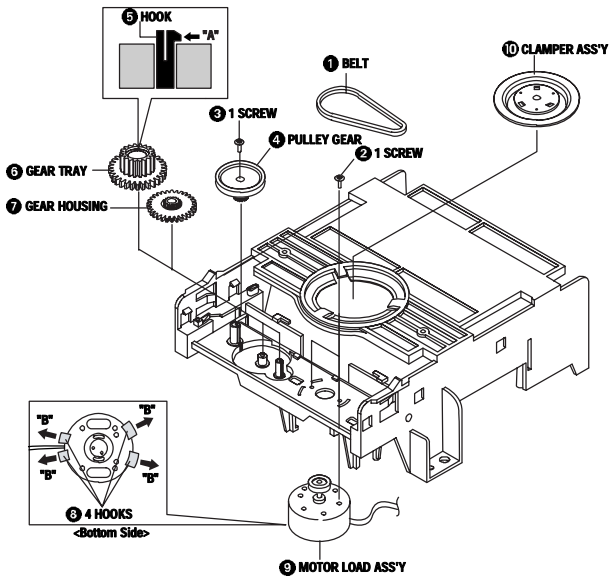

Fig. 3-3-4

3-3-5 Removing Sub Chassis

1) Remove 4 Screws ❶.
2) Lift Assembly Braket Deck ❷ up.

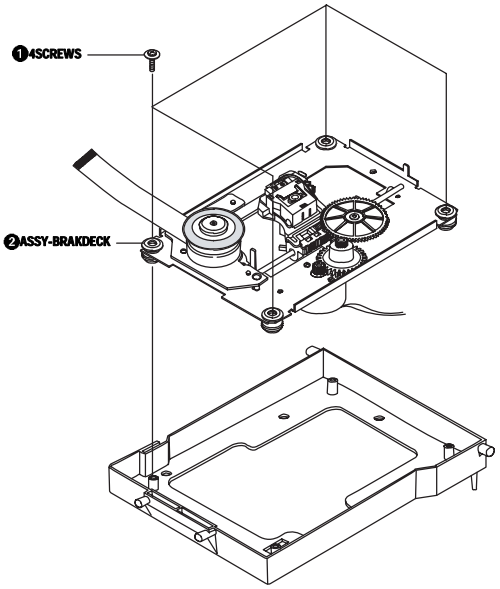

Fig. 3-3-5

3-3-6 Removing Bracket Deck

1) Remove Washer ❶.
2) Remove Gear Feed B ❷, Gear Feed A ❸.
3) Remove 2 Screws ❹.
4) Remove Shaft Pick-up ❺ and Pick-up Assembly ❻.
5) Remove screw ❼.
6) Remove 2 screws ❽.
7) Remove 3 Springs Spindle ❾ and Motor Spindle Assembly ❿.

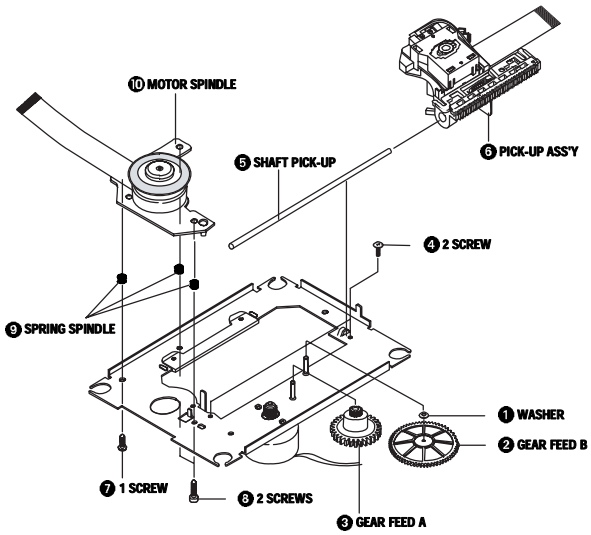

Fig. 3-3-6

3-4 Connector Diagram

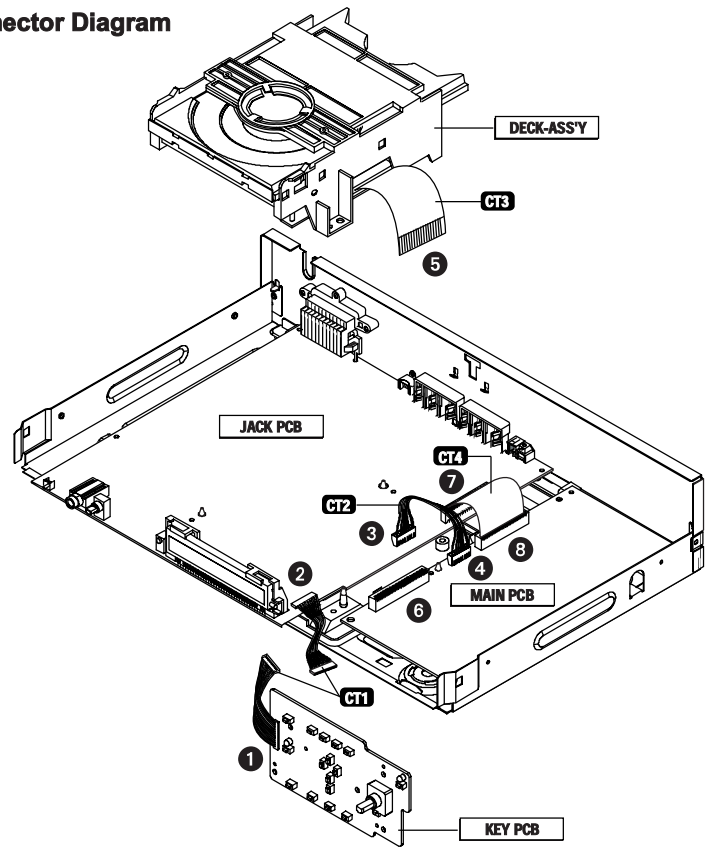

NO.	CONNECTOR NO.	DIRECTION	CONNECTOR NO.	NO.
❶	FCN1	KEY PCB ◄ CT1 ► JACK PCB	CON5	❷
❸	PCNS1	JACK PCB ◄ CT2 ► MAIN PCB	PCN1	❹
❺	FPC	DECK-ASS'Y ◄ CT3 ► MAIN PCB	DCN1	❻
❼	CN1	JACK PCB ◄ CT4 ► MAIN PCB	CN8	❽

GENERAL BLOCK DIAGRAM - SYNOPTIQUE GÉNÉRAL - BLOCKSCHALTBILD ALLGEMEIN - SCHEMA A BLOCCHI GENERALE - ESQUEMA DE BLOQUES GENERAL

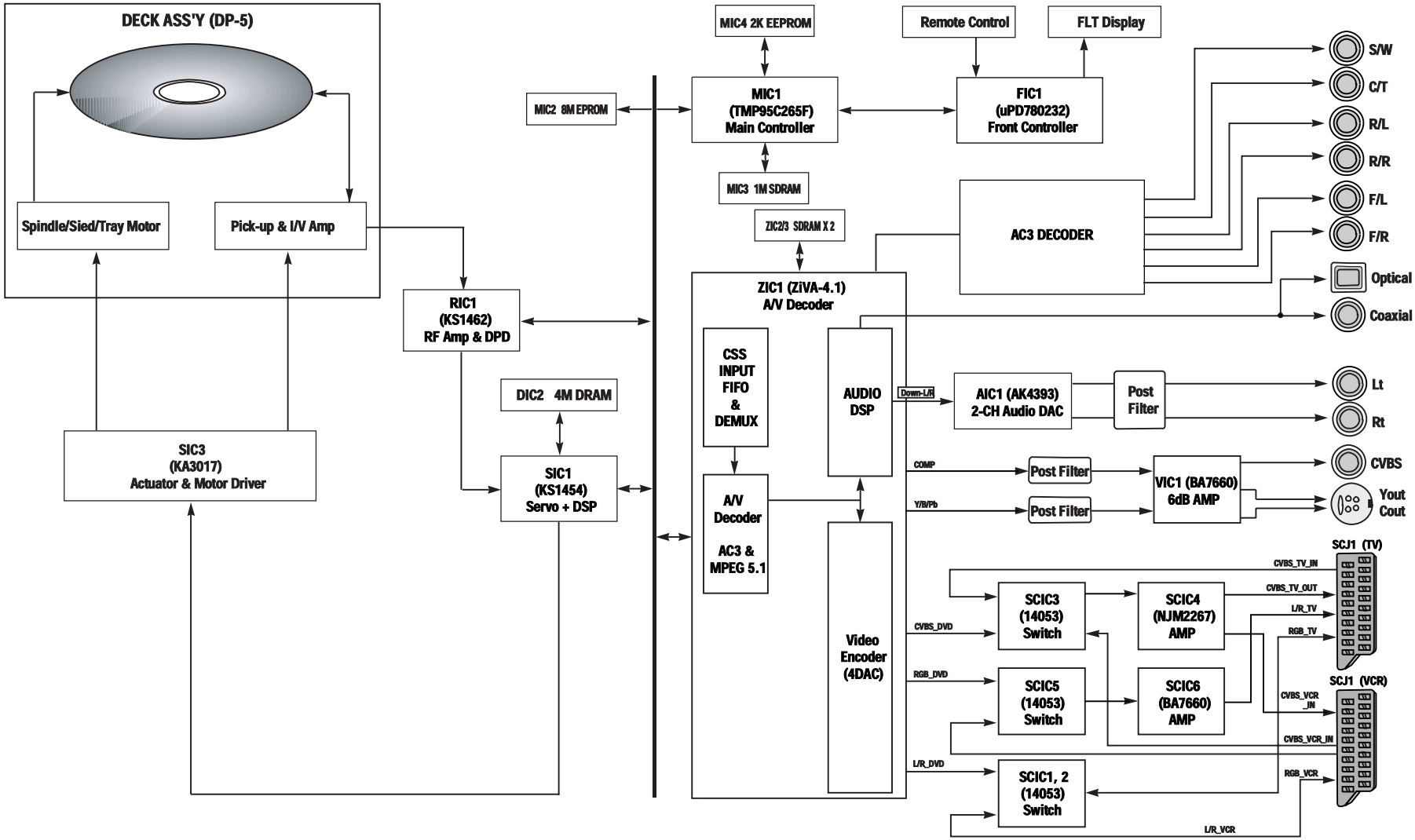

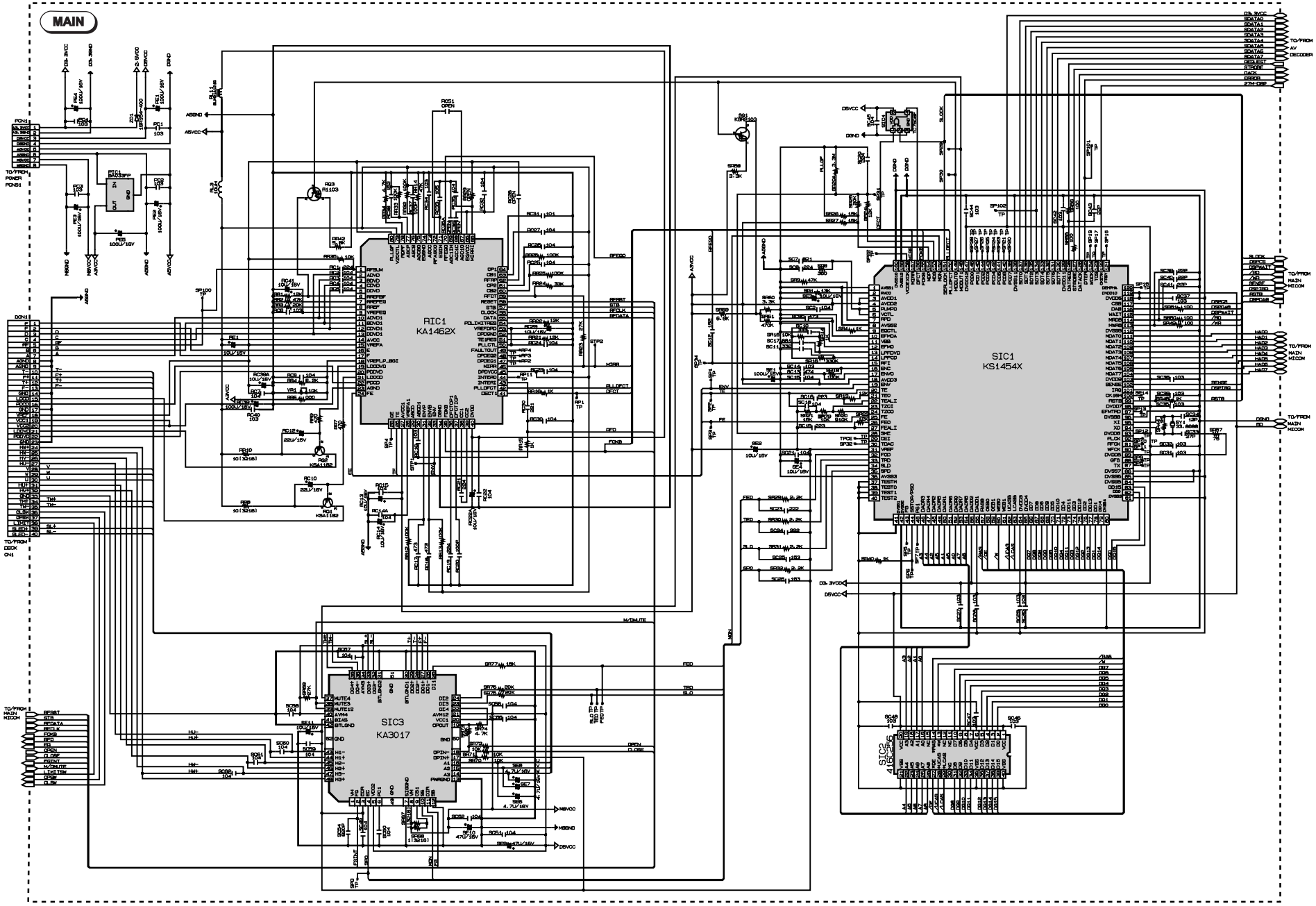
MAIN
RIC1
KA1462X
SIC1
KS1454X
SIC3
KA3017
SIC2
4165256

RIC1 (KS1462)

MODE / PIN	DVD		CD	
	PLAY	STOP	PLAY	STOP
1	2.5	2.5	2.5	2.5
2	2.5	2.5	2.5	2.5
3	2.5	2.5	2.5	2.5
4	2.5	2.5	2.5	2.5
5	2.5	2.5	2.5	2.5
6	1.3	1.3	1.3	1.3
7	1.3	1.3	1.4	1.5
8	1.3	1.3	1.3	1.3
9	2.5	2.5	2.5	2.5
10	2.5	2.5	2.7	2.5
11	2.5	2.5	2.7	2.5
12	2.5	2.5	2.6	2.5
13	2.5	2.5	2.6	2.5
14	5	5	5	5.1
15	2.5	2.5	2.5	2.5
16	2.5	2.5	2.8	2.5
17	2.5	2.5	2.8	2.5
18	1	1	1	1
19	5	5	5	5
20	0	0	0	0
21	4.9	0	3.8	5
22	0	0	0.2	0
23	0	0	0	0
24	1.6	1.7	1.7	1.7
25	1.7	1.7	1.7	1.7
26	1.7	1.7	1.7	1.7
27	3.3	3.3	3.3	3.3
28	1.7	1.7	1.7	1.7
29	2.6	1.4	2.5	1.4
30	2.5	2.5	2.5	2.5
31	3.3	2.5	3.3	2.5
32	1.6	2.4	1.6	2.5
33	1.6	0	1.5	0
34	0	0	0	0
35	0	5	0	5.1
36	3.5	2.5	3.4	2.5
37	3.5	2.6	3.5	2.8
38	3.4	2.5	3.4	2.5
39	3.5	2.6	3.4	2.6
40	5.1	5.1	5.1	5.1

MODE / PIN	DVD		CD	
	PLAY	STOP	PLAY	STOP
41	0	0	0	0
42	0	0	0	0
43	2.5	2.5	2.5	2.5
44	0	0	0	0
45	5	5	5	5.1
46	0	5.1	0	5.1
47	2.5	2.5	0.1	0.1
48	2.5	2.5	0.1	0.1
49	0	5.1	5.1	5.1
50	2.5	2.5	1.4	1.5
51	1.3	1.3	0	0
52	0	0	0	0
53	2.5	2.5	1.4	1.5
54	1.3	1.3	0	0
55	0	0	0	0
56	5.1	5.1	5.1	5.2
57	0	0	0	0
58	5.1	5.1	5.1	5.1
59	2.4	0.5	2	1.2
60	5	5	5	5
61	2.6	0.3	2.2	1.1
62	3.3	0.2	2.3	1.3
63	2	2.5	2.1	2.5
64	3.1	2.6	2.8	2.6
65	2.5	2.5	2.5	2.5
66	5	5	5	5.1
67	1.6	1.6	1.7	1.7
68	4.7	4.7	4.6	4.7
69	2.5	2.5	2.5	2.5
70	1.6	1.6	1.7	1.7
71	2.5	2.6	2.5	2.5
72	2.5	2.6	2.5	2.5
73	2.4	2.4	3.9	4
74	0	0	0	0
75	1.3	1.3	1.3	1.3
76	2.2	2.5	2.3	2.5
77	3	2.5	2.9	2.5
78	1.1	1.2	1.1	1.2
79	5	5	5	5.1
80	2.5	2.5	2.5	2.5

SIC1 (KS1454)

MODE / PIN	DVD		CD	
	PLAY	STOP	PLAY	STOP
1	0	0	0	0
2	1.2	1.2	1.2	1.2
3	3.4	3.4	3.4	3.4
4	3.4	3.4	3.4	3.4
5	1.5	3.4	1.5	3
6	1.5	2.5	1.5	3
7	1.2	1.2	1.2	1.7
8	0	0	0	1.7
9	1.4	0.7	0.7	0.7
10	1.7	1.7	1.7	1.7
11	0	0	0	0
12	1.7	1.7	1.7	1.7
13	1.7	1.7	1.7	1.7
14	1.7	1.7	1.7	1.7
15	1.7	1.7	1.7	1.7
16	1.8	1.6	1.7	1.6
17	1.9	1.7	1.7	1.7
18	3.4	3.4	3.4	3.4
19	1.7	0.1	1.7	0
20	1.7	1.7	1.7	1.7
21	1.7	1.7	1.7	1.6
22	1.7	1.7	1.7	1.6
23	1.7	1.7	1.7	1.7
24	1.7	3.3	1.7	0.1
25	1.7	1.7	1.7	1.7
26	1.7	1.7	1.7	1.7
27	1.7	1.7	1.7	1.6
28	1.9	1.7	1.8	1.7
29	0.2	1.7	1	1.1
30	0	0.1	0	0
31	1.7	1.7	1.7	1.7
32	1.7	1.7	1.9	1.7
33	1.6	1.6	1.6	1.6
34	1.7	1.7	1.7	1.7
35	1.8	1.6	1.8	1.6
36	0	0	0	0
37	0	0	0	0
38	0	0	0	0
39	0	0	0	0
40	0	0	0	0

MODE / PIN	DVD		CD	
	PLAY	STOP	PLAY	STOP
41	0	0	0	0
42	0	0	0	0
43	1.6	1.5	1.5	1.4
44	0	0	0	0
45	1.5	1.4	1.4	1.5
46	0.2	0	0.2	0.4
47	0.2	0	0.2	0.4
48	0.2	0	0.2	0.4
49	0.2	0	0.1	0.2
50	0.2	0	0.2	0.4
51	0.2	0	0.1	0.2
52	0.2	0	0.2	0.4
53	0.2	0	0.1	0.2
54	0.2	0	0	0
55	3.2	3.2	3.2	3.2
56	5.1	5.2	5.1	5.2
57	2.4	2.4	4.9	4.8
58	5	5.2	5	5
59	5.1	5.2	5.1	5.2
60	5	5.2	5.1	5
61	5.1	5.2	5.2	5.2
62	3.8	3.8	5	5
63	3.9	3.8	5	5
64	5.1	5.2	5.2	5.2
65	3.2	3.2	3.2	3.2
66	1.4	1.5	2.4	2.5
67	1.4	1.6	0	0
68	1.4	1.6	2.4	2.7
69	1.4	1.6	0	0
70	1.4	1.6	2.4	2.5
71	1.4	1.4	0	0
72	1.4	1.5	2.4	2.1
73	1.4	1.5	0	0
74	1.4	1.5	2.4	2.3
75	1.4	1.5	0	0
76	1.4	1.5	2.4	2.4
77	1.4	1.5	0	0
78	1.4	1.6	2.4	2.6
79	1.4	1.5	0	0
80	0	0	0	0

MODE / PIN	DVD		CD	
	PLAY	STOP	PLAY	STOP
81	0	0	0	0
82	1.5	1.6	2.4	2.5
83	1.5	1.5	0	0
84	0	0	0	0
85	0	0	0	0
86	0	0	0	0
87	1.3	1.5	2.5	2.5
88	5.1	0	0	0
89	3.2	3.2	3.2	3.2
90	2.6	2.6	2.6	2.6
91	2.6	2.6	2.6	2.6
92	2.5	2.5	2.5	2.5
93	3.2	3.2	3.2	3.2
94	2.5	2.5	2.5	2.5
95	2.5	2.5	2.5	2.5
96	0	0	0	2.6
97	2.5	2.5	2.5	5.2
98	3.2	3.2	3.2	3.2
99	5.1	5.2	5.1	5.2
100	0	0	0	0
101	4.7	5.2	5.1	0.1
102	5	5.2	5.1	5.2
103	3.2	3.2	3.2	3.2
104	1.8	1.8	1.5	1.5
105	2.3	2.3	2	1.9
106	2	2	2	2
107	1.7	1.6	1.9	1.9
108	1.7	1.7	1.9	1.9
109	1.7	2.1	2.2	2.2
110	2.5	2.6	3.1	3.1
111	1.7	1.8	1.9	2
112	0	0	0	0
113	5.1	5.1	5.1	5.2
114	2.5	2.4	2.5	2.5
115	5.1	5.2	5.1	5.2
116	5.1	5.2	5.1	5.2
117	5.1	5.2	5.1	5.2
118	5.1	5.2	5.1	5.2
119	5.1	5.2	5.1	5.2
120	0	0	0	0

MODE / PIN	DVD		CD	
	PLAY	STOP	PLAY	STOP
121	5.1	5.1	5.1	5.2
122	2.1	5.1	5.1	2.1
123	5.1	5.1	5.1	5.2
124	0	0	0	0
125	0	0	0	0
126	4.4	5.1	5.1	5.2
127	2.4	5.1	5.1	5.2
128	2.4	0	0	0
129	3.2	3.2	3.2	3.2
130	2.5	2.8	2.8	2.7
131	2.5	0.1	0.1	0
132	2.5	2.6	2.6	2.6
133	2.5	0.1	0.1	2.6
134	2.5	0	0	5.2
135	2.5	2.5	2.5	2.5
136	2.5	2.6	2.6	2.6
137	2.5	1.7	1.7	0
138	0	0	0	0
139	0	0	0	0
140	0	0	0	0
141	0	0	0	0
142	0	0	0	0
143	0	0	0	0
144	0	0	0	0
145	0	0	0	0
146	0	0	0	0
147	3.2	3.2	3.2	3.2
148	5.1	5.1	5.1	5.2
149	5.1	0	0	0
150	0	0	0	0
151	5.1	5.1	5.1	0
152	5.1	5.1	5.1	0
153	1.9	1.7	1.7	1.7
154	1.9	2	2	1.7
155	0	0	0	5.1
156	0	0	0	0
157	0	0	0	0
158	1.5	1.5	1.5	1.3
159	0	0	0	0
160	0	0	0	0

SIC3 (KA3017)

MODE / PIN	DVD		CD	
	PLAY	STOP	PLAY	STOP
1	0.1	0.1	0.1	0.1
2	2.3	5.0	2.3	5.0
3	2.5	2.5	2.5	2.5
4	2.7	2.5	2.7	2.5
5	5.0	5.0	5.0	5.0
6	0.0	0.0	0.0	0.0
7	0.0	0.0	0.0	0.0
8	7.9	8.0	7.9	8.0
9	7.9	8.0	7.9	8.0
10	5.0	0.0	5.0	0.0
11	0.0	5.0	0.0	5.0
12	0.0	0.0	0.0	0.0
13	0.0	0.0	0.0	0.0
14	5.9	0.0	6.6	0.0
15	6.0	0.0	6.6	0.0
16	5.9	0.0	6.6	0.0
17	2.5	2.5	2.5	2.5
18	2.5	2.5	2.5	2.5
19	2.5	2.5	2.5	2.5
20	7.9	8.0	7.9	8.0
21	7.9	8.0	7.9	8.0
22	2.5	2.5	2.5	2.5
23	2.5	2.5	2.5	2.5
24	2.5	2.5	2.5	2.5
25	2.5	2.5	2.5	2.5
26	3.7	4.0	3.5	4.0
27	4.2	4.0	4.2	4.0
28	4.0	4.0	4.0	4.0
29	4.0	4.0	4.0	4.0
30	0.0	0.0	0.0	0.0
31	0.0	0.0	0.0	0.0
32	3.9	4.0	3.9	4.0
33	3.9	4.0	3.9	4.0
34	7.9	8.0	7.9	8.0
35	4.0	4.0	4.0	4.0
36	3.9	3.9	3.9	3.9
37	0.0	0.0	0.0	0.0
38	0.0	0.0	0.0	0.0
39	0.0	0.0	0.0	0.0
40	7.9	8.0	7.9	8.0
41	2.5	2.5	2.5	2.5
42	0.0	0.0	0.0	0.0
43	2.5	2.6	2.5	2.6
44	2.5	2.5	2.5	2.5
45	2.5	2.6	2.5	2.6
46	2.5	2.4	2.5	2.4
47	2.5	2.4	2.5	2.4
48	2.5	2.4	2.5	2.4

AV PROCESSING SCHEMATIC DIAGRAM - SCHEMA DU TRAITEMENT AV - SCHALTBILD AV-VERARBEITUNG - SCHEMA ELABORAZIONE AV - ESQUEMA DEL TRATAMIENTO AV

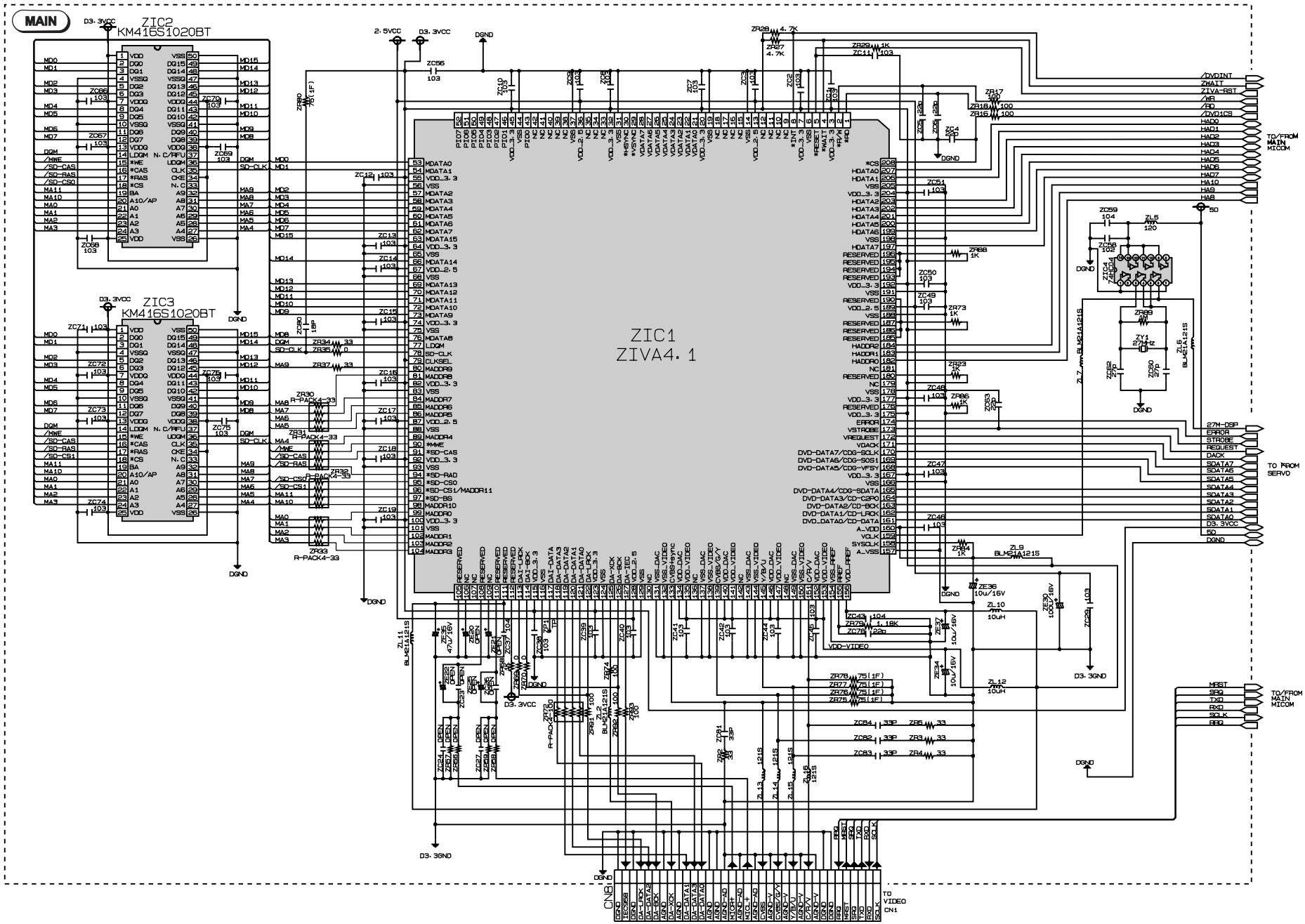

ZIC1 (ZIVA4.1)

MODE / PIN	DVD		CD	
	PLAY	STOP	PLAY	STOP
1	2.4	2.4	2.4	2.4
2	4.9	4.9	4.9	4.9
3	3.2	3.2	3.2	3.2
4	3.2	3.2	3.2	3.2
5	5.0	5.0	5.0	5.0
6	0.0	0.0	0.0	0.0
7	3.2	3.2	3.2	3.2
8	3.2	3.2	3.2	3.2
9	2.7	2.7	2.7	2.7
10	2.7	2.7	2.7	2.7
11	2.7	2.7	2.7	2.7
12	2.7	2.7	2.7	2.7
13	2.4	2.4	2.4	2.4
14	0.0	0.0	0.0	0.0
15	2.7	2.7	2.7	2.7
16	2.7	2.7	2.7	2.7
17	2.7	2.7	2.7	2.7
18	2.7	2.7	2.7	2.7
19	0.0	0.0	0.0	0.0
20	3.2	3.2	3.2	3.2
21	0.2	0.2	0.2	0.2
22	0.2	0.2	0.2	0.2
23	0.2	0.2	0.2	0.2
24	0.2	0.2	0.2	0.2
25	0.2	0.2	0.2	0.2
26	0.2	0.2	0.2	0.2
27	0.2	0.2	0.2	0.2
28	0.2	0.2	0.2	0.2
29	3.2	3.2	3.2	3.2
30	2.7	2.7	2.7	2.7
31	0.0	0.0	0.0	0.0
32	3.2	3.2	3.2	3.2
33	3.2	3.2	3.2	3.2
34	3.2	3.2	3.2	3.2
35	3.2	3.2	3.2	3.2
36	3.2	3.2	3.2	3.2
37	0.0	0.0	0.0	0.0
38	3.2	3.2	3.2	3.2
39	3.2	3.2	3.2	3.2
40	3.2	3.2	3.2	3.2
41	3.2	3.2	3.2	3.2
42	3.2	3.2	3.2	3.2
43	0.0	0.0	0.0	0.0
44	0.0	0.0	0.0	0.0
45	3.2	3.2	3.2	3.2
46	0.0	0.0	0.0	0.0
47	0.0	0.0	0.0	0.0
48	0.0	0.0	0.0	0.0
49	0.0	0.0	0.0	0.0
50	0.0	0.0	0.0	0.0
51	0.0	0.0	0.0	0.0
52	0.0	0.0	0.0	0.0
53	0.8	0.8	0.8	0.8
54	1.0	1.0	1.0	1.0
55	3.2	3.2	3.2	3.2
56	0.0	0.0	0.0	0.0
57	1.2	0.9	1.2	0.9
58	1.2	0.9	1.2	0.9
59	1.2	0.9	1.2	0.9
60	1.2	0.9	1.2	0.9
61	1.2	0.9	1.2	0.9
62	1.2	0.9	1.2	0.9
63	1.2	0.9	1.2	0.9
64	3.2	3.2	3.2	3.2
65	0.0	0.0	0.0	0.0
66	1.4	0.9	1.4	0.9
67	2.4	2.4	2.4	2.4
68	0.0	0.0	0.0	0.0
69	1.4	0.9	1.4	0.9
70	1.4	0.9	1.4	0.9
71	1.4	0.9	1.4	0.9
72	1.4	0.9	1.4	0.9
73	1.4	0.9	1.4	0.9
74	3.2	3.2	3.2	3.2
75	0.0	0.0	0.0	0.0
76	1.4	0.9	1.4	0.9
77	0.0	0.0	0.0	0.0
78	1.6	1.6	1.6	1.6
79	3.2	3.2	3.2	3.2
80	0.8	0.5	0.6	0.5
81	0.8	0.5	0.6	0.4
82	3.2	3.2	3.2	3.2
83	0.0	0.0	0.0	0.0
84	1.4	0.9	1.4	0.9
85	1.4	0.9	1.4	0.9
86	1.4	0.9	1.4	0.9
87	3.2	3.2	3.2	3.2
88	0.0	0.0	0.0	0.0
89	1.3	1.5	1.3	1.5
90	3.1	3.1	3.1	3.1
91	1.5	1.5	1.5	1.5
92	3.2	3.2	3.2	3.2
93	0.0	0.0	0.0	0.0
94	2.7	2.4	2.7	2.4
95	2.1	2.3	2.1	2.3
96	3.1	3.1	3.0	3.0
97	1.2	1.3	1.2	1.3
98	0.3	0.3	0.3	0.3
99	0.4	0.7	0.4	0.7
100	3.2	3.2	3.2	3.2
101	0.0	0.0	0.0	0.0
102	1.4	1.2	1.4	1.2
103	1.4	1.4	1.4	1.4
104	1.4	1.4	1.4	1.4
105	0.0	0.0	0.0	0.0
106	0.0	0.0	0.0	0.0
107	0.0	0.0	0.0	0.0
108	0.0	0.0	0.0	0.0
109	0.2	0.2	0.2	0.2
110	0.0	0.0	0.0	0.0
111	3.2	3.2	3.2	3.2
112	3.2	3.2	3.2	3.2
113	1.6	1.6	1.6	1.6
114	1.6	1.6	1.6	1.6
115	3.2	3.2	3.2	3.2
116	0.0	0.0	0.0	0.0
117	0.0	0.0	0.0	0.0
118	0.0	0.0	0.0	0.0
119	0.0	0.0	0.0	0.0
120	1.6	0.0	1.6	0.0
121	1.6	0.0	1.6	0.0
122	1.6	1.6	1.6	1.6
123	3.2	3.2	3.2	3.2
124	0.0	0.0	0.0	0.0
125	1.6	1.6	1.6	1.6
126	1.6	1.6	1.6	1.6
127	1.6	1.6	1.6	1.6
128	2.4	2.4	2.4	2.4
129	0.0	0.0	0.0	0.0
130	0.0	0.0	0.0	0.0
131	0.0	0.0	0.0	0.0
132	0.0	0.0	0.0	0.0
133	0.6	0.5	0.6	0.5
134	3.2	3.2	3.2	3.2
135	3.2	3.2	3.2	3.2

ZIC1 (ZIVA4.1)

MODE / PIN	DVD		CD	
	PLAY	STOP	PLAY	STOP
136	0.0	0.0	0.0	0.0
137	0.0	0.0	0.0	0.0
138	0.0	0.0	0.0	0.0
139	0.6	0.5	0.6	0.5
140	3.2	3.2	3.2	3.2
141	3.2	3.2	3.2	3.2
142	0.0	0.0	0.0	0.0
143	0.0	0.0	0.0	0.0
144	0.0	0.0	0.0	0.0
145	0.7	0.5	0.7	0.5
146	3.2	3.2	3.2	3.2
147	3.2	3.2	3.2	3.2
148	0.0	0.0	0.0	0.0
149	0.0	0.0	0.0	0.0
150	0.0	0.0	0.0	0.0
151	0.5	0.5	0.5	0.5
152	3.2	3.2	3.2	3.2
153	3.2	3.2	3.2	3.2
154	0.0	0.0	0.0	0.0
155	1.3	1.3	1.3	1.3
156	3.2	3.2	3.2	3.2
157	0.0	0.0	0.0	0.0
158	3.2	3.2	3.2	3.2
159	1.6	1.6	1.6	1.6
160	3.2	3.2	3.2	3.2
161	2.5	0.0	2.5	0.0
162	2.5	0.0	2.5	0.0
163	2.5	0.0	2.5	0.0
164	2.5	0.0	2.5	0.0
165	2.5	0.0	2.5	0.0
166	0.0	0.0	0.0	0.0
167	3.2	3.2	3.2	3.2
168	2.5	0.0	2.5	0.0
169	2.5	0.0	2.5	0.0
170	2.5	0.0	2.5	0.0
171	4.0	5.0	5.0	5.0
172	2.5	2.0	2.5	1.6
173	2.4	2.4	2.4	2.4
174	0.0	0.0	0.0	0.0
175	3.2	3.2	3.2	3.2
176	0.0	0.0	0.0	0.0
177	3.2	3.2	3.2	3.2
178	0.0	0.0	0.0	0.0
179	3.2	3.2	3.2	3.2
180	0.0	0.0	0.0	0.0
181	3.2	3.2	3.2	3.2
182	2.5	2.5	2.5	2.5
183	2.5	2.5	2.5	2.5
184	2.5	2.5	2.5	2.5
185	3.2	3.2	3.2	3.2
186	3.2	3.2	3.2	3.2
187	3.2	3.2	3.2	3.2
188	0.0	0.0	0.0	0.0
189	3.2	3.2	3.2	3.2
190	3.2	3.2	3.2	3.2
191	0.0	0.0	0.0	0.0
192	3.2	3.2	3.2	3.2
193	3.2	3.2	3.2	3.2
194	3.2	3.2	3.2	3.2
195	3.2	3.2	3.2	3.2
196	3.2	3.2	3.2	3.2
197	2.4	2.3	2.4	2.3
198	0.0	0.0	0.0	0.0
199	2.2	2.2	2.2	2.2
200	2.0	2.0	2.0	2.0
201	1.6	1.6	1.6	1.6
202	1.6	1.6	1.6	1.6
203	1.8	2.0	1.8	2.0
204	3.2	3.2	3.2	3.2
205	0.0	0.0	0.0	0.0
206	1.6	1.6	1.6	1.6
207	1.6	1.6	1.6	1.6
208	4.9	5.0	4.9	5.0

ZIC2,3 (KM416S1120D)

MODE / PIN	DVD		CD	
	PLAY	STOP	PLAY	STOP
1	3.2	3.2	3.2	3.2
2	1.0	0.7	1.0	0.7
3	1.0	0.7	1.0	0.7
4	0.0	0.0	0.0	0.0
5	1.0	1.0	1.0	1.0
6	0.9	0.9	0.9	0.9
7	3.2	3.2	3.2	3.2
8	1.3	0.7	0.6	0.8
9	1.0	1.0	0.8	1.2
10	0.0	0.0	0.0	0.0
11	1.0	1.0	0.6	1.1
12	1.6	1.0	0.6	1.2
13	3.2	3.2	3.2	3.2
14	0.0	0.0	0.0	0.0
15	3.0	3.1	3.0	3.1
16	1.4	1.5	1.4	1.5
17	2.7	2.4	3.2	2.6
18	2.2	2.3	2.2	2.3
19	1.2	1.1	1.2	1.1
20	0.5	0.7	0.5	0.7
21	0.5	0.7	0.5	0.7
22	1.4	1.2	1.4	1.2
23	1.4	1.4	1.4	1.4
24	1.3	1.3	1.3	1.3
25	3.2	3.2	3.2	3.2
26	0.0	0.0	0.0	0.0
27	1.4	1.5	1.4	1.5
28	1.5	1.5	1.5	1.5
29	1.4	1.2	1.4	1.2
30	1.4	1.3	1.4	1.3
31	0.7	0.6	0.7	0.6
32	0.0	0.0	0.0	0.0
33	0.0	0.0	0.0	0.0
34	3.2	3.2	3.2	3.2
35	1.6	1.6	1.6	1.6
36	0.0	0.0	0.0	0.0
37	0.0	0.0	0.0	0.0
38	3.2	3.2	3.2	3.2
39	1.2	0.7	1.2	0.7
40	1.3	0.8	1.2	0.8
41	0.0	0.0	0.0	0.0
42	1.1	0.4	1.1	0.4
43	1.1	0.5	1.1	0.5
44	3.2	3.2	3.2	3.2
45	1.3	1.0	1.3	1.0
46	1.4	1.0	1.4	1.0
47	0.0	0.0	0.0	0.0
48	1.0	0.9	1.0	0.9
49	1.0	0.7	1.0	0.7
50	0.0	0.0	0.0	0.0

SYSTEM CONTROL SCHEMATIC DIAGRAM - SCHEMA DES CIRCUITS DE GESTION - SCHALTBILD GERÄTESTEUERUNG - SCHEMA DEI CIRCUITI CONTROLLO MECCANICA - ESQUEMA DE LOS CIRCUITOS GESTIÓN

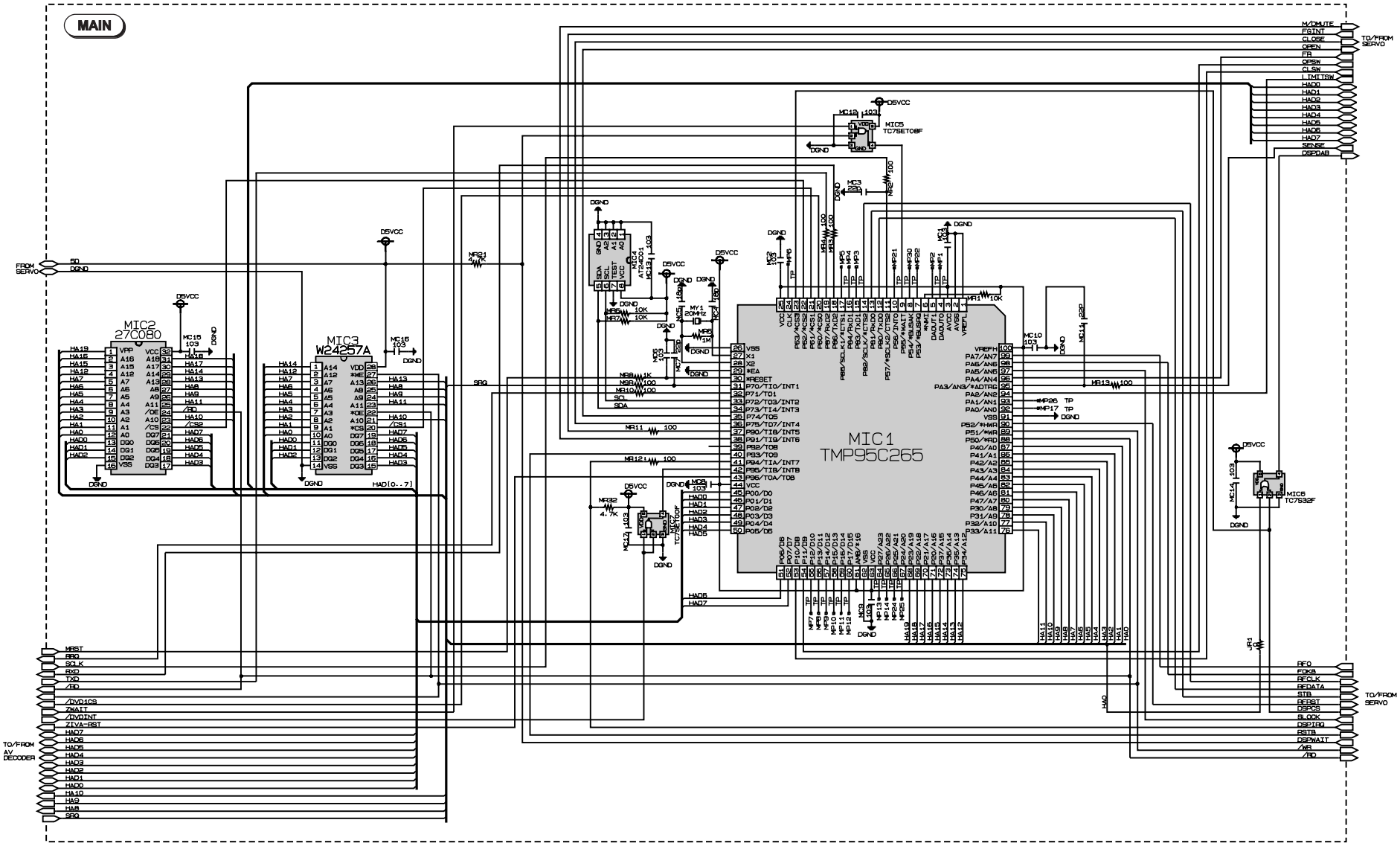

SYSTEM CONTROL MEASUREMENTS - MESURES DES CIRCUITS DE GESTION - MESSUNGEN GERÄTESTEUERUNG - MISURE DEI CIRCUITI CONTROLLO MECCANICA - MEDIDAS DE LOS CIRCUITOS GESTIÓN

MIC1 (TMP95C265)

MODE / PIN	DVD		CD	
	PLAY	STOP	PLAY	STOP
1	0.0	0.0	0.0	0.0
2	0.0	0.0	0.0	0.0
3	4.9	4.9	4.9	4.9
4	0.0	0.0	0.0	0.0
5	0.0	0.0	0.0	0.0
6	4.9	4.9	4.9	4.9
7	2.5	4.9	4.9	4.9
8	2.5	4.9	4.9	4.9
9	2.5	2.5	4.9	4.9
10	4.9	4.9	0.0	0.0
11	2.5	4.9	2.5	4.9
12	2.5	0.0	0.0	0.0
13	2.5	0.0	0.0	0.0
14	2.5	4.9	4.9	4.9
15	4.9	4.9	4.9	4.9
16	0.0	0.0	0.0	0.0
17	4.9	4.9	4.9	4.9
18	2.5	4.9	2.5	4.9
19	2.5	4.9	2.5	4.9
20	2.5	2.5	2.5	2.5
21	2.5	2.5	2.5	2.5
22	2.5	2.5	2.5	2.5
23	2.5	2.5	2.5	2.5
24	2.5	2.5	2.5	2.5
25	4.9	4.9	4.9	4.9
26	0.0	0.0	0.0	0.0
27	2.5	2.5	2.5	2.5
28	2.5	2.5	2.5	2.5
29	0.0	0.0	0.0	0.0
30	4.9	4.9	4.9	4.9
31	0.0	0.0	0.0	0.0
32	2.5	4.9	2.5	4.9
33	4.9	4.9	4.9	4.9
34	4.9	4.9	4.9	4.9
35	0.0	0.0	0.0	0.0
36	4.9	4.9	4.9	4.9
37	2.5	4.9	2.5	4.9
38	0.0	0.0	0.0	0.0
39	4.9	0.0	0.0	0.0
40	4.9	4.9	4.9	4.9
41	2.5	2.5	2.5	2.5
42	2.5	2.5	2.5	2.5
43	4.9	4.9	4.9	4.9
44	4.9	4.9	4.9	4.9
45	2.5	2.5	2.5	2.5
46	2.5	2.5	2.5	2.5
47	2.5	2.5	2.5	2.5
48	2.5	2.5	2.5	2.5
49	2.5	2.5	2.5	2.5
50	2.5	2.5	2.5	2.5

MODE / PIN	DVD		CD	
	PLAY	STOP	PLAY	STOP
51	2.5	2.5	2.5	2.5
52	2.5	2.5	2.5	2.5
53	0.0	0.0	0.0	0.0
54	4.9	4.9	4.9	4.9
55	0.0	0.0	0.0	0.0
56	0.0	0.0	0.0	0.0
57	0.0	0.0	0.0	0.0
58	0.0	0.0	0.0	0.0
59	4.9	0.0	0.0	0.0
60	2.5	0.0	2.5	0.0
61	4.9	4.9	4.9	4.9
62	0.0	0.0	0.0	0.0
63	4.9	4.9	4.9	4.9
64	2.5	2.5	2.5	2.5
65	2.5	2.5	2.5	2.5
66	2.5	2.5	2.5	2.5
67	2.5	2.5	2.5	2.5
68	2.5	2.5	2.5	2.5
69	2.5	2.5	2.5	2.5
70	2.5	2.5	2.5	2.5
71	2.5	2.5	2.5	2.5
72	2.5	2.5	2.5	2.5
73	2.5	2.5	2.5	2.5
74	2.5	2.5	2.5	2.5
75	2.5	2.5	2.5	2.5
76	2.5	2.5	2.5	2.5
77	2.5	2.5	2.5	2.5
78	2.5	2.5	2.5	2.5
79	2.5	2.5	2.5	2.5
80	2.5	2.5	2.5	2.5
81	2.5	2.5	2.5	2.5
82	2.5	2.5	2.5	2.5
83	2.5	2.5	2.5	2.5
84	2.5	2.5	2.5	2.5
85	2.5	2.5	2.5	2.5
86	2.5	2.5	2.5	2.5
87	2.5	2.5	2.5	2.5
88	2.5	2.5	2.5	2.5
89	2.5	2.5	2.5	2.5
90	4.9	4.9	4.9	4.9
91	0.0	0.0	0.0	0.0
92	3.2	0.4	3.7	1.1
93	0.0	0.0	0.0	0.0
94	4.9	4.9	4.9	4.9
95	2.5	4.9	4.9	4.9
96	0.0	4.9	0.0	4.9
97	4.9	0.0	4.9	0.0
98	0.0	4.9	0.0	4.9
99	2.8	1.9	2.7	1.8
100	4.9	4.9	4.9	4.9

MIC2 (M27C801)

MODE / PIN	DVD		CD	
	PLAY	STOP	PLAY	STOP
1	0.0	0.0	0.0	0.0
2	1.3	1.4	1.2	1.9
3	2.7	2.7	2.0	1.9
4	2.4	2.7	1.7	1.7
5	2.3	2.4	2.8	2.4
6	2.7	2.6	2.5	2.8
7	2.4	2.4	2.4	2.2
8	2.6	2.5	2.5	2.5
9	2.4	2.4	2.4	2.3
10	2.4	2.4	2.4	2.4
11	2.3	2.4	2.3	2.3
12	2.1	2.2	2.0	2.2
13	1.7	1.7	1.8	1.6
14	2.5	2.6	2.5	2.4
15	1.8	1.8	2.0	2.0
16	0.0	0.0	0.0	0.0
17	1.8	1.8	2.1	2.0
18	1.6	1.6	1.5	1.5
19	2.0	2.0	2.3	2.0
20	2.2	2.2	2.0	2.0
21	1.8	1.8	2.1	1.8
22	1.1	1.1	1.2	1.0
23	2.6	2.6	2.8	3.0
24	2.4	2.4	2.5	2.4
25	1.9	1.9	1.7	2.0
26	3.5	3.5	3.3	3.3
27	2.8	2.8	2.7	2.9
28	2.7	2.6	2.3	2.0
29	2.2	2.1	1.4	1.0
30	1.8	2.2	2.2	1.5
31	0.0	0.0	1.3	0.6
32	5.0	5.0	5.0	5.0

MIC3 (KM681000C)

MODE / PIN	DVD		CD	
	PLAY	STOP	PLAY	STOP
1	0.0	0.0	0.0	0.0
2	1.3	1.3	1.2	1.9
3	2.0	2.0	1.4	0.9
4	2.3	2.7	1.7	1.7
5	2.3	2.4	2.8	2.4
6	2.6	2.6	2.5	2.8
7	2.4	2.4	2.4	2.2
8	2.5	2.5	2.5	2.5
9	2.4	2.4	2.4	2.3
10	2.4	2.4	2.4	2.4
11	2.3	2.3	2.3	2.4
12	2.1	2.2	2.0	2.2
13	1.7	1.7	1.8	1.6
14	2.4	2.5	2.5	2.4
15	1.9	1.8	2.0	2.0
16	0.0	0.0	0.0	0.0
17	1.8	1.8	2.1	2.0
18	1.6	1.6	0.0	1.5
19	2.0	2.0	2.4	2.0
20	2.2	2.2	2.0	2.0
21	1.8	1.8	2.1	1.8
22	4.7	4.7	4.9	4.9
23	2.6	2.7	2.7	2.8
24	2.4	2.4	2.5	2.4
25	1.9	1.9	1.7	2.0
26	3.5	3.5	3.4	3.5
27	2.8	2.8	2.7	2.9
28	2.7	2.6	2.2	2.0
29	5.0	5.0	5.0	5.0
30	5.0	5.0	5.0	5.0
31	3.0	3.0	2.0	1.9
32	5.0	5.0	5.0	5.0

MIC4 (KS24C021)

MODE / PIN	DVD		CD	
	PLAY	STOP	PLAY	STOP
1	0.0	0.0	0.0	0.0
2	0.0	0.0	0.0	0.0
3	0.0	0.0	0.0	0.0
4	0.0	0.0	0.0	0.0
5	5.0	5.0	5.0	5.0
6	5.0	5.0	5.0	5.0
7	0.0	0.0	0.0	0.0
8	5.0	5.0	5.0	5.0

DISPLAY & CONTROL MEASUREMENTS - MESURES DES CIRCUITS COMMANDES/AFFICHEUR - MESSUNGEN BEDIENTEIL/ANZEIGE - MISURE DEI CIRCUITI DISPLAY E COMANDI - MEDIDAS DE LOS CIRCUITOS MANDOS/VISUALIZADOR

FIC1 (uPD780232)

MODE / PIN	DVD		CD	
	PLAY	STOP	PLAY	STOP
1	5.0	5.0	5.0	5.0
2	0.0	0.0	0.0	0.0
3	2.3	2.3	2.3	2.3
4	4.4	4.4	4.4	4.4
5	0.0	0.0	0.0	0.0
6	5.0	5.0	5.0	5.0
7	4.9	4.9	4.9	4.9
8	5.0	5.0	5.0	5.0
9	0.0	0.0	0.0	0.0
10	0.0	0.0	0.0	0.0
11	0.0	0.0	0.0	0.0
12	0.0	0.0	0.0	0.0
13	0.0	0.0	0.0	0.0
14	4.5	4.5	4.5	4.5
15	1.5	1.5	1.5	1.5
16	5.0	5.0	5.0	5.0
17	5.0	5.0	5.0	5.0
18	0.0	0.0	0.0	0.0
19	0.0	0.0	0.0	0.0
20	0.0	0.0	0.0	0.0
21	0.0	0.0	0.0	0.0
22	0.0	0.0	0.0	0.0
23	0.0	0.0	0.0	0.0
24	5.0	5.0	5.0	5.0
25	5.0	5.0	5.0	5.0
26	0.0	0.0	0.0	0.0
27	4.7	4.7	4.7	4.7
28	4.9	4.9	4.9	4.9
29	4.5	4.5	4.5	4.5
30	4.5	4.5	4.5	4.5
31	4.5	4.5	4.5	4.5
32	4.5	4.5	4.5	4.5
33	4.5	4.5	4.5	4.5
34	4.5	4.5	4.5	4.5
35	0	0	0	0
36	0	0	0	0
37	0	0	0	0
38	0	0	0	0
39	0	0	0	0
40	0	0	0	0
41	0	0	0	0
42	4.9	4.9	4.9	4.9
43	5.0	5.0	5.0	5.0
44	4.9	4.9	4.9	4.9
45	4.9	4.9	4.9	4.9

MODE / PIN	DVD		CD	
	PLAY	STOP	PLAY	STOP
46	4.9	4.9	4.9	4.9
47	0.0	4.9	0.0	4.9
48	0.0	4.9	0.0	4.9
49	0.0	0.0	0.0	0.0
50	0.0	0.0	0.0	0.0
51	-28.0	-23.7	-28.0	-23.7
52	-28.0	-23.7	-28.0	-23.7
53	-29.0	-23.7	-29.0	-23.7
54	-29.0	-23.7	-29.0	-23.7
55	-29.0	-23.7	-29.0	-23.7
56	-28.0	-23.7	-28.0	-23.7
57	-29.0	-23.7	-29.0	-23.7
58	-29.0	-23.7	-29.0	-23.7
59	3.5	4.9	3.5	4.9
60	-29.0	-28.3	-29.0	-28.3
61	-27.0	-26.6	-27.0	-26.6
62	-26.0	-23.3	-26.0	-23.3
63	-27.5	-26.6	-27.5	-26.6
64	-27.5	-26.6	-27.5	-26.6
65	-27.5	-26.6	-27.5	-26.6
66	-26.6	-23.7	-26.6	-23.7
67	-27.5	-26.6	-27.5	-26.6
68	-27.5	-26.6	-27.5	-26.6
69	-27.5	-26.6	-27.5	-26.6
70	-26.3	-23.7	-26.3	-23.7
71	-26.3	-23.7	-26.3	-23.7
72	-26.3	-23.3	-26.3	-23.3
73	-26.3	-23.7	-26.3	-23.7
74	-26.3	-23.7	-26.3	-23.7
75	-26.3	-23.7	-26.3	-23.7
76	-26.3	-23.7	-26.3	-23.7
77	-26.3	-23.7	-26.3	-23.7
78	-26.3	-23.7	-26.3	-23.7
79	-26.3	-23.7	-26.3	-23.7
80	-26.3	-23.7	-26.3	-23.7

DISPLAY & CONTROL SCHEMATIC DIAGRAM - SCHEMA DES CIRCUITS COMMANDES/AFFICHEUR - SCHALTBILD BEDIENTEIL/ANZEIGE - SCHEMA DEI CIRCUITI DISPLAY E COMANDI - ESQUEMA DE LOS CIRCUITOS MANDOS/VISUALIZADOR

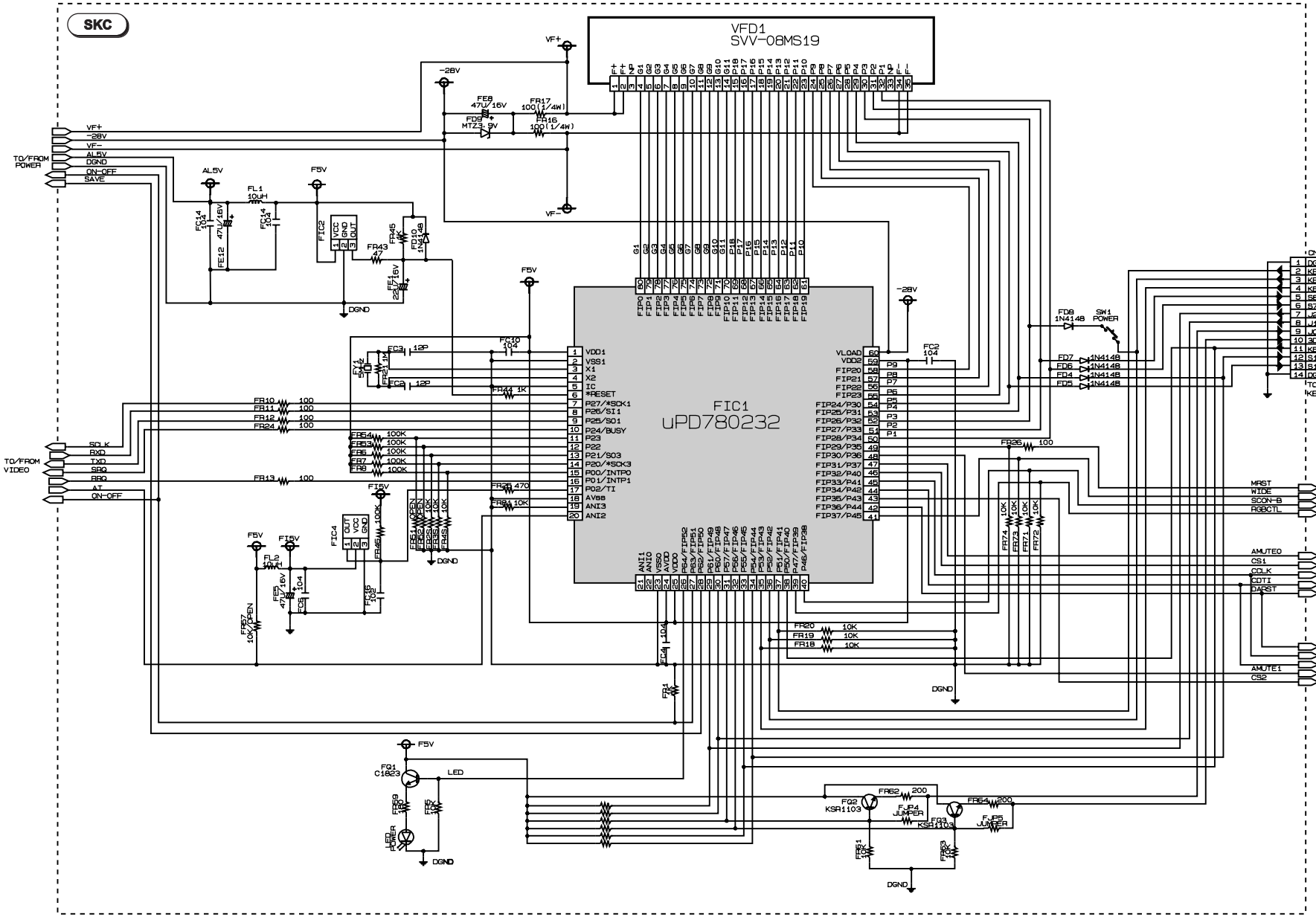

AUDIO SCHEMATIC DIAGRAM - SCHEMA DES CIRCUITS AUDIO - SCHALTBILD AUDIOSIGNALVERARBEITUNG - SCHEMA DEI CIRCUITI AUDIO - ESQUEMA DE LOS CIRCUITOS AUDIO

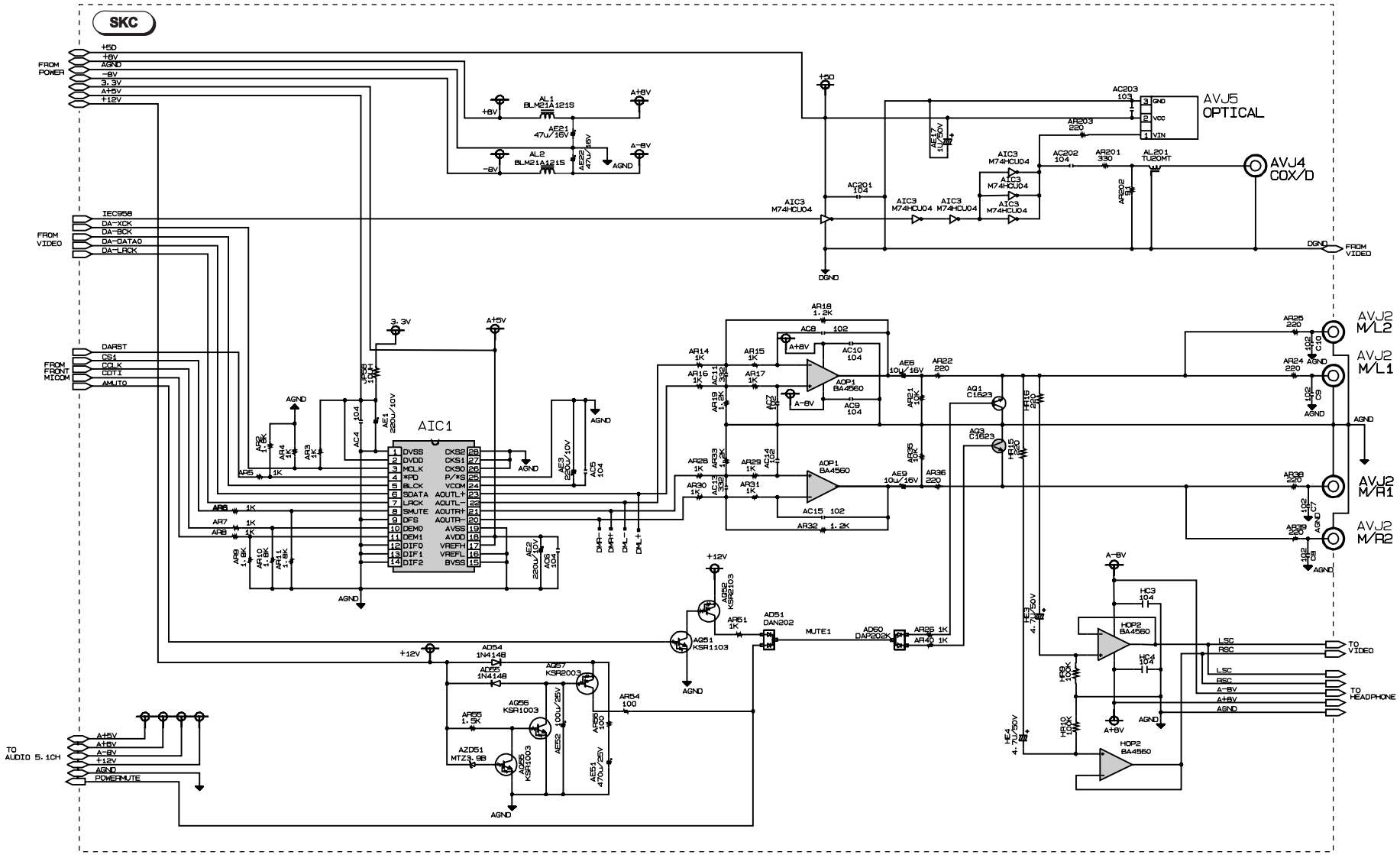

AUDIO MEASUREMENTS - MESURES DES CIRCUITS AUDIO - MESSUNGEN AUDIOSIGNALVERARBEITUNG - MISURE DEI CIRCUITI AUDIO - MEDIDAS DE LOS CIRCUITOS AUDIO

AIC1 (AK4393)

MODE / PIN	DVD		CD	
	PLAY	STOP	PLAY	STOP
1	0.0	0.0	0.0	0.0
2	3.2	3.2	3.2	3.2
3	1.6	1.6	1.6	1.6
4	3.0	3.0	3.0	3.0
5	1.6	1.6	1.6	1.6
6	1.3	0.0	1.3	0.0
7	1.6	1.6	1.6	1.6
8	3.0	3.0	3.0	3.0
9	0.0	0.0	0.0	0.0
10	3.0	3.0	3.0	3.0
11	0.0	3.0	0.0	3.0
12	0.0	0.0	0.0	0.0
13	0.0	0.0	0.0	0.0
14	0.0	0.0	0.0	0.0
15	0.0	0.0	0.0	0.0
16	0.0	0.0	0.0	0.0
17	5.0	5.0	5.0	5.0
18	5.0	5.0	5.0	5.0
19	0.0	0.0	0.0	0.0
20	2.6	2.6	2.6	2.6
21	2.6	2.6	2.6	2.6
22	2.6	2.6	2.6	2.6
23	2.6	0.0	2.6	0.0
24	2.6	0.0	2.6	0.0
25	0.0	0.0	0.0	0.0
26	0.0	0.0	0.0	0.0
27	0.0	0.0	0.0	0.0
28	0.0	0.0	0.0	0.0

KEYBOARD SCHEMATIC DIAGRAM - SCHEMA DES CIRCUITS COMMANDE - SCHALTBILD BEDIENTEIL - SCHEMA DEI CIRCUITI TASTIERA - ESQUEMA DE LOS CIRCUITOS MANDOS

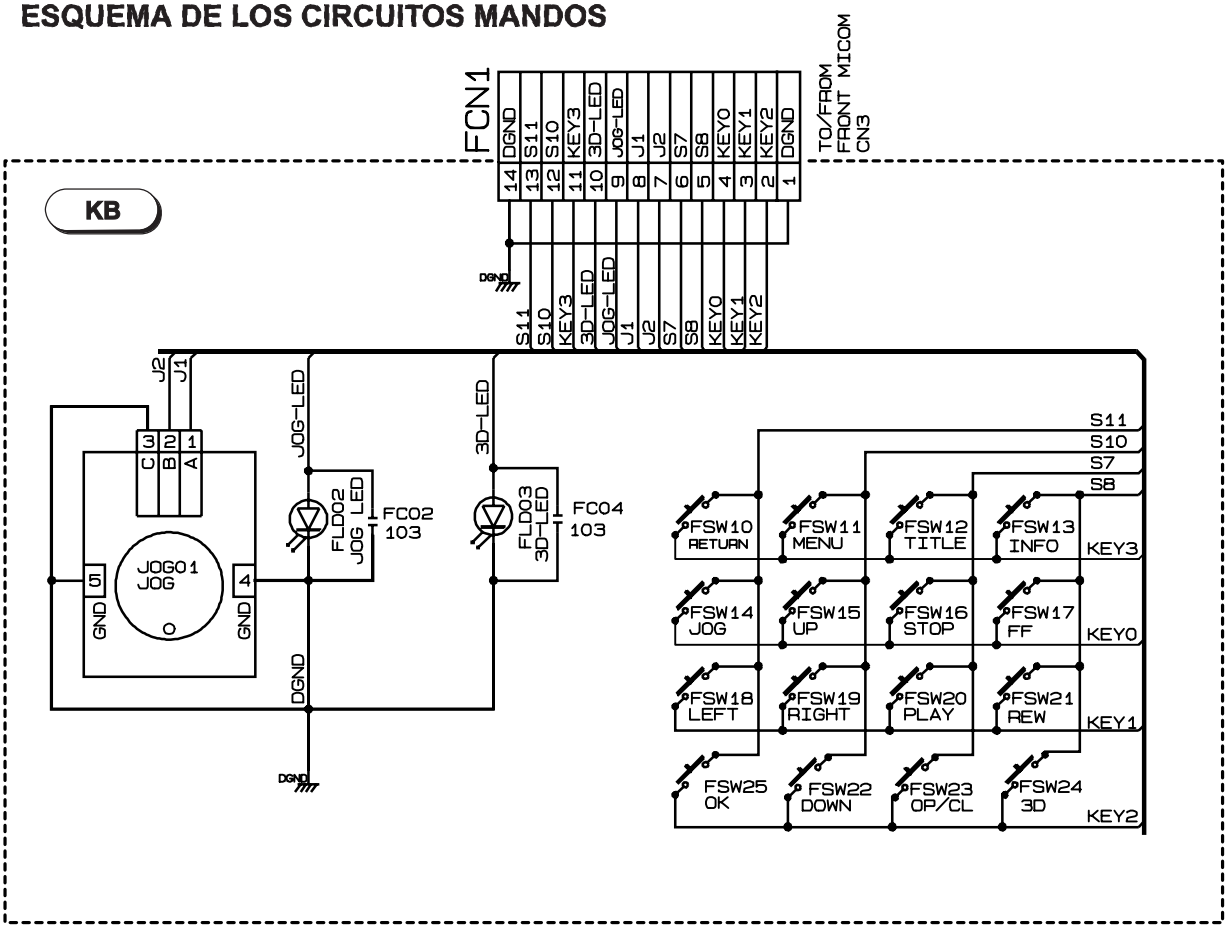

HEADPHONE SCHEMATIC DIAGRAM - SCHEMA DES CIRCUITS CASQUE - SCHALTBILD KOPFHÖRERANSCHLUSS - SCHEMA DEI CIRCUITI CUFFIA - ESQUEMA DE LOS CIRCUITOS AURICULARES

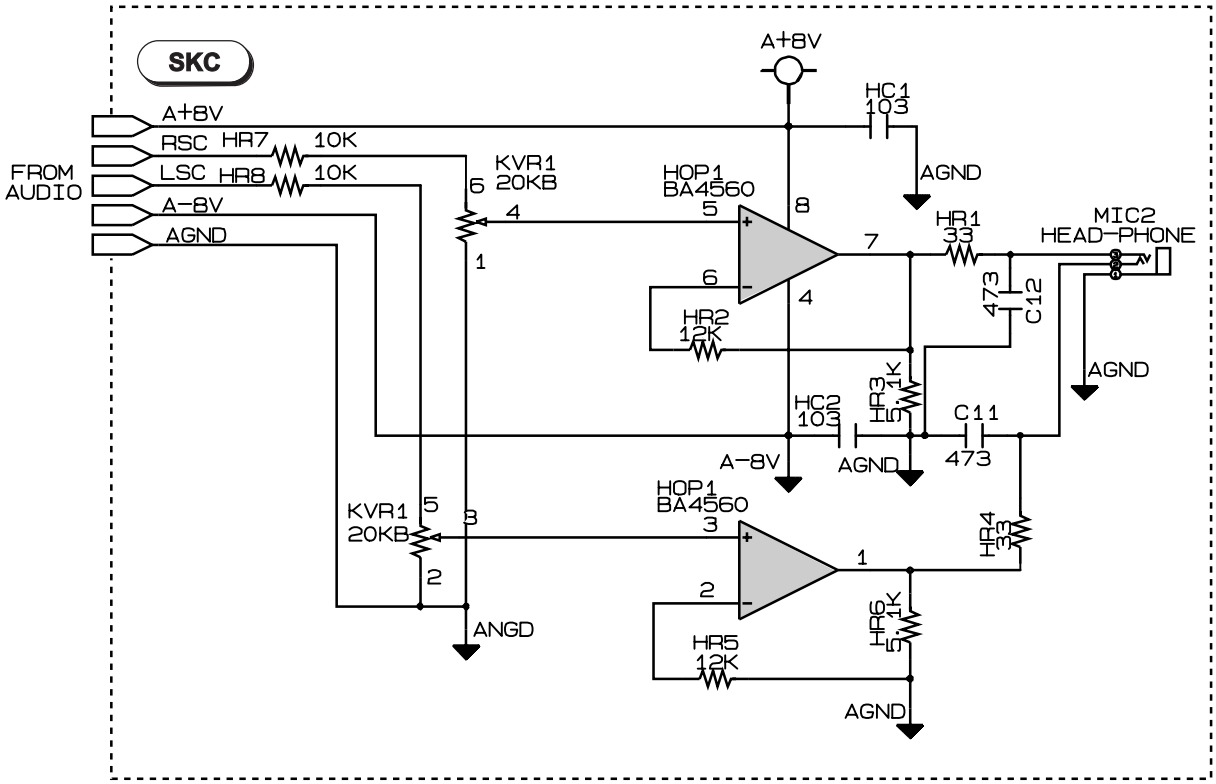

AUDIO 5.1 CHANNEL SCHEMATIC DIAGRAM - SCHEMA DES CIRCUITS AUDIO 5.1 - SCHALTBILD 5.1 MULTIKANAL AUDIO - SCHEMA DEI CIRCUITI AUDIO 5.1 - ESQUEMA DE LOS CIRCUITOS AUDIO 5.1

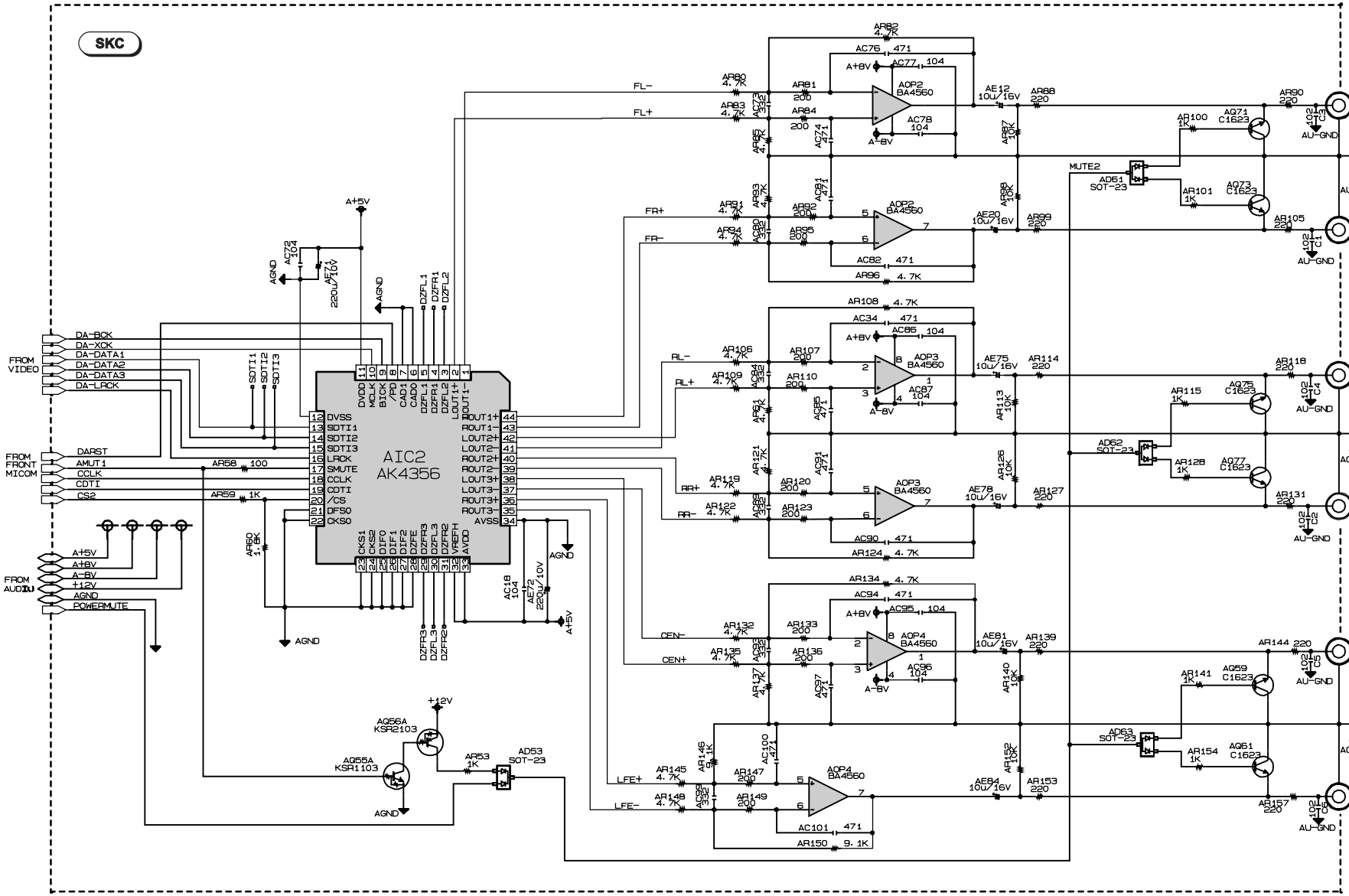

JACK PRINTED CIRCUIT BOARD - CIRCUIT IMPRIME PLATINE PRISES - LEITERPLATTE ANSCHLUSS - PIASTRA PRESE - PLATINA TOMAS

COMPONENT SIDE - COTÉ COMPOSANTS - BESTÜCKUNGSSEITE - LATO COMPONENTI - LADO COMPONENTES

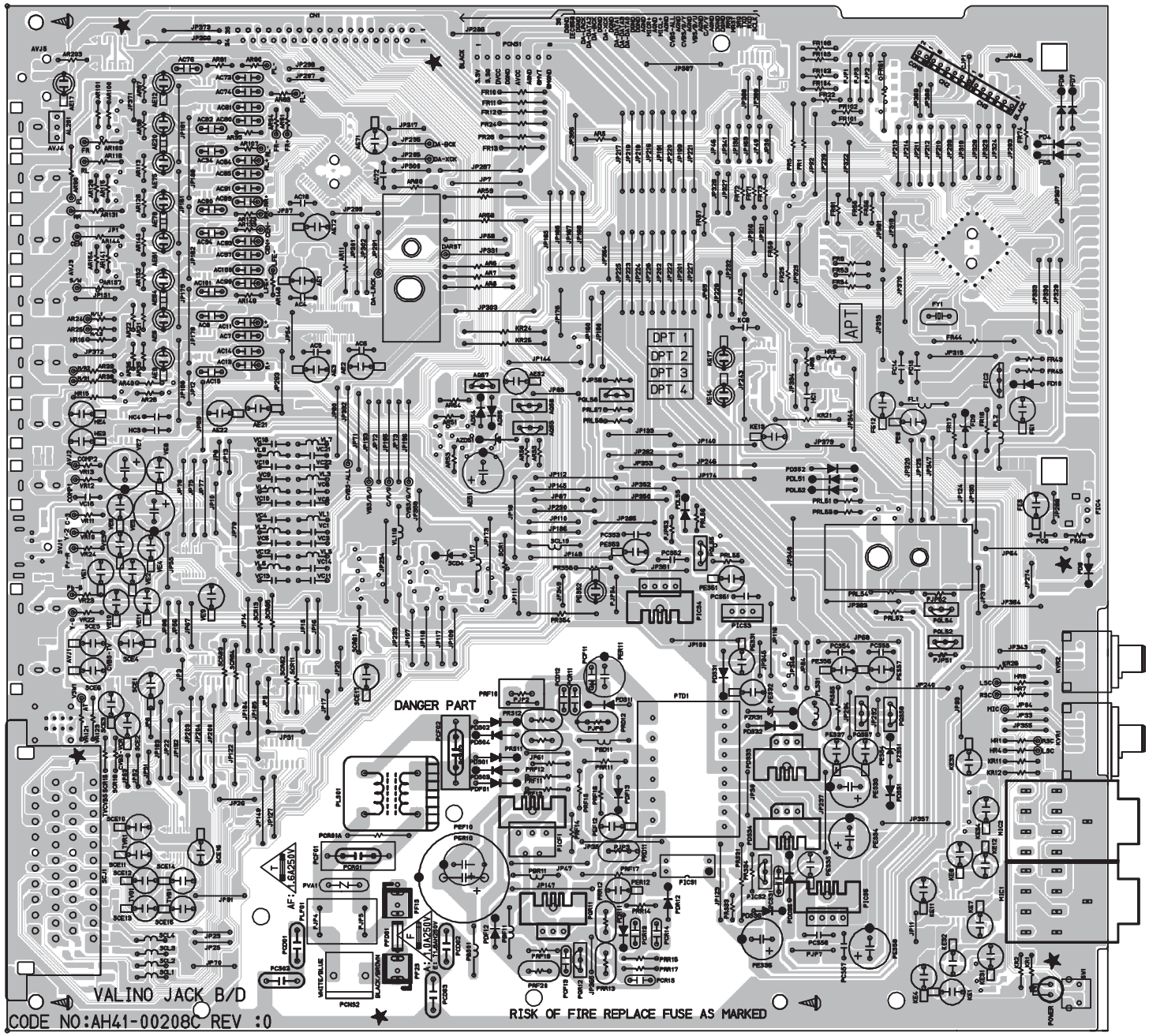

JACK PRINTED CIRCUIT BOARD - CIRCUIT IMPRIME PLATINE PRISES - LEITERPLATTE ANSCHLUSS - PIASTRA PRESE - PLATINA TOMAS

SOLDER SIDE - COTÉ CUIVRE - LÖTSEITE - LATO SALDATURE - LADO DEL COBRE

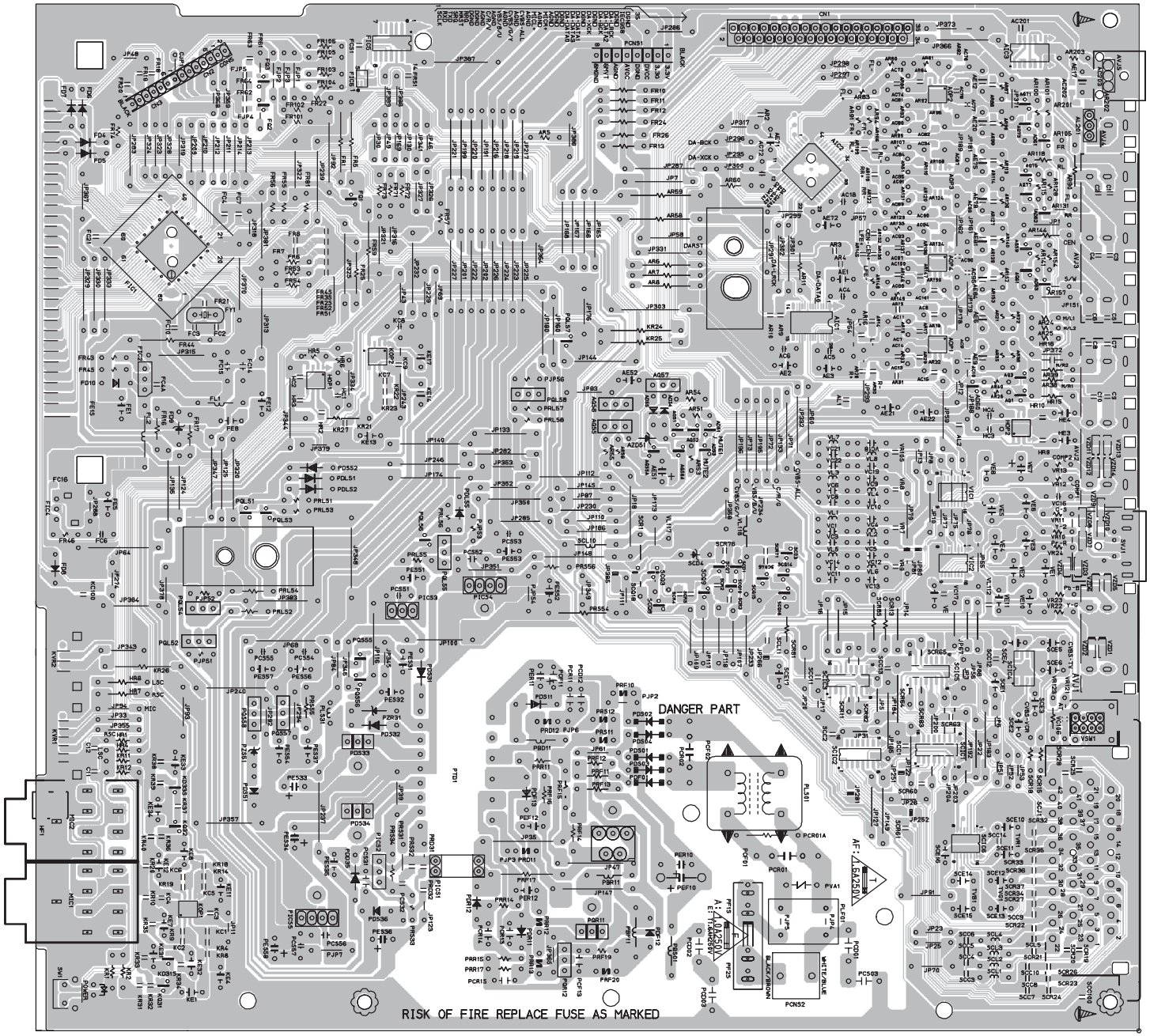

MAIN PRINTED CIRCUIT BOARD - CIRCUIT IMPRIME PLATINE PRINCIPALE - GRUNDPLATTE - PIASTRA PRINCIPALE - PLATINA PRINCIPAL

COMPONENT SIDE - COTÉ COMPOSANTS - BESTÜCKUNGSSEITE - LATO COMPONENTI - LADO COMPONENTES

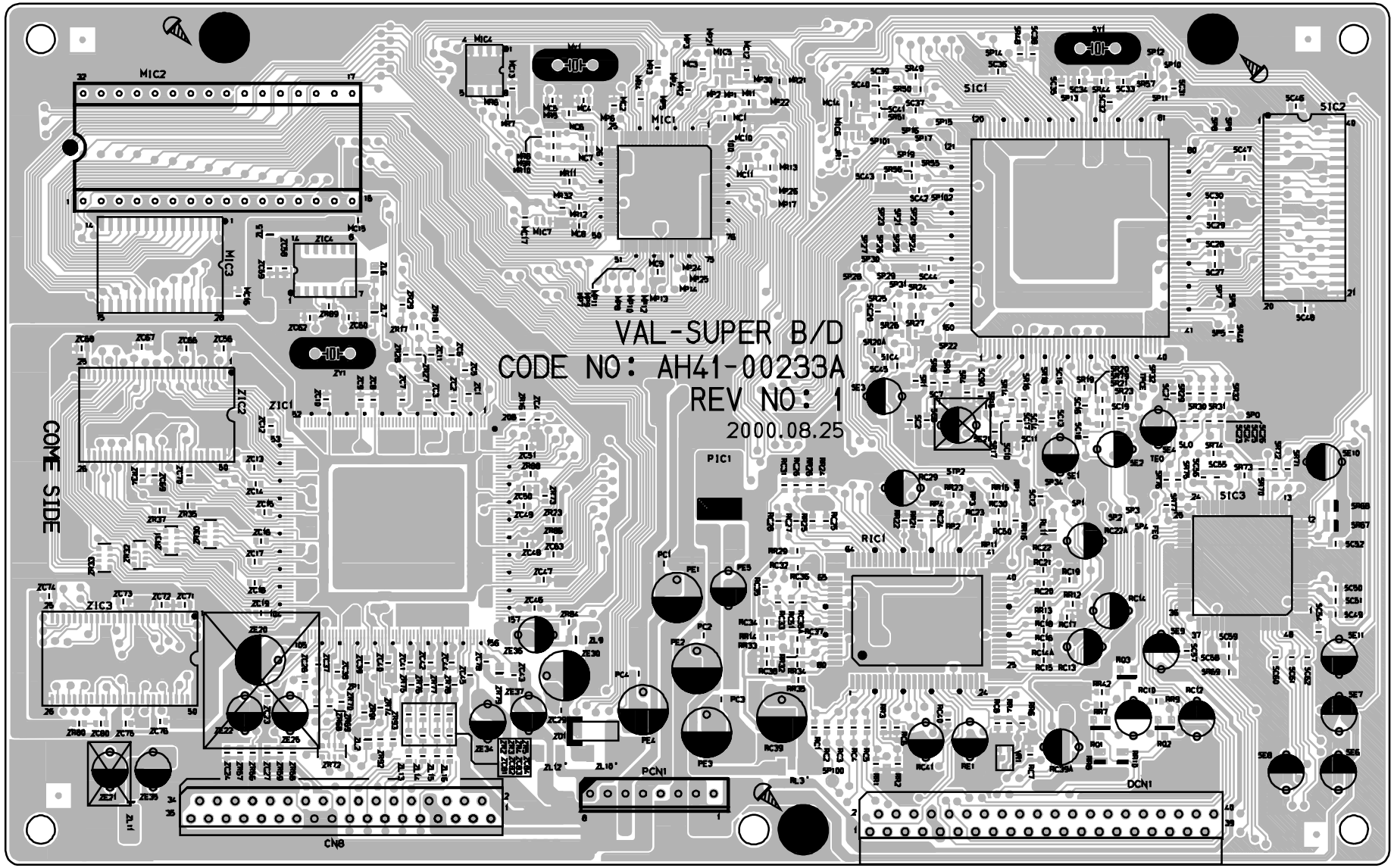

KEYBOARD CIRCUIT BOARDS - CIRCUITS IMPRIMES PLATINES COMMANDES - LETERPLATTE BEDIENTEIL - PIASTRE TASTIERA - PLATINAS MANDOS

COMPONENT SIDE - COTÉ COMPOSANTS - BESTÜCKUNGSSEITE -
LATO COMPONENTI - LADO COMPONENTES

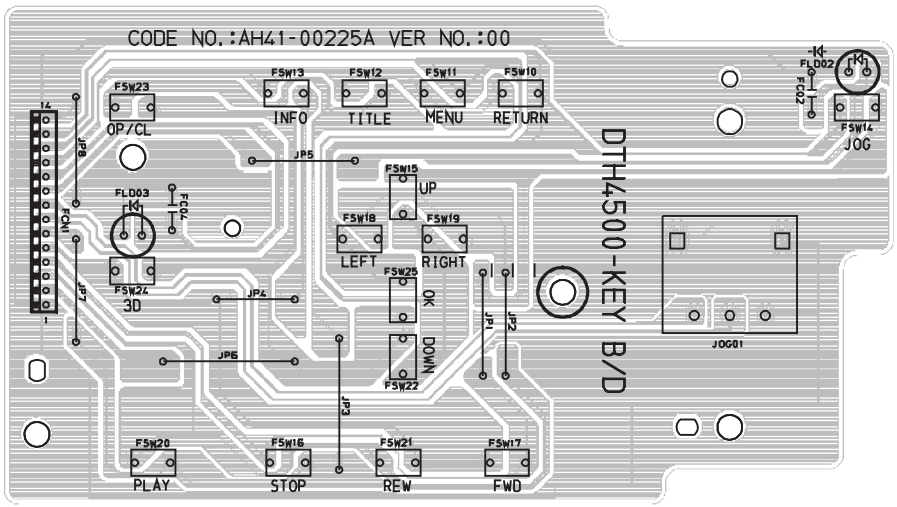

TECHNICAL SPECIFICATIONS

Power Source : AC 110V - 240V +/- 10%, 50Hz/60Hz

Power Consumption : 18W (approx. 2,4W when power is OFF)

Weight : 3,3 Kg

Dimension : 430 (W) x 89 (H) x 280 (D) mm (excluding protrusions)

Operating Temperature Range : +5 to +35 degrees Celsius (+41° to +95° F)

Operating Humidity Range : 10 to 75% (no condensation)

Signal system : PAL 50 - 60Hz (PAL 625/50, PAL 525/60),
NTSC or PAL 60Hz capable TV set is required to play back NTSC discs.

Disc played :

(1) DVD-Video disc :
PAL and NTSC
12/8 cm single-sided, single-layer
12/8 cm single-sided, double-layer
12/8 cm double-sided, single-layer
12/8 cm double-sided, double-layer
(2) Audio CD :
12/8 cm disc
(3 Video CD :
PAL and NTSC, 12/8 cm side
(4) S-Video CD
(5) most CD-Rs and CD-RWs (DTH4200 only)

Audio signal output :

(1)	Frequency response :	DVD linear audio 48KHz sampling : 4Hz to 22KHz (EIAJ) DVD linear audio 96KHz sampling : 4Hz to 44KHz (EIAJ) CD Audio : 4Hz to 20KHz (EIAJ)
(2)	S/N ratio :	105dB (EIAJ)
(3)	Dynamic range :	DVD linear audio : 100dB (EIAJ) CD audio : 100dB (EIAJ)
(4)	Wow & flutter :	below measurable limits
(5)	Total harmonic distortion :	less than 0.005%

Pickup : Wave length : 655nm, Laser power : CLASS 2
2 Laser diodes (DTH4200 only)

ADJUSTMENT PROCEDURES

1. Handling the optical pickup

The laser diode used in the optical pickup may break down due to potential differences caused by electricity produced by clothing or the human body, care should therefore be taken to prevent electrostatic discharge whilst repairing the optical pickup.

The following method is recommended.

(1) Place a conductive sheet on the work bench (The black sheet used for wrapping repair parts.)

(2) Place the set on the conductive sheet so that the chassis is grounded to the sheet.

(3) Place your hands on the conductive sheet (doing this gives them the same ground as the sheet.)

(4) Remove the optical pickup block

(5) Perform work on top of the conductive sheet. Be careful not to let your clothes or any other static sources to touch the unit.

* Grounding the Human Body, use an antistatic wrist strap to discharge static electricity from your body.

* Grounding the work place, use either an antistatic matt or a sheet of steel on the area where the optical pickup is to be placed and ground the matt/sheet.

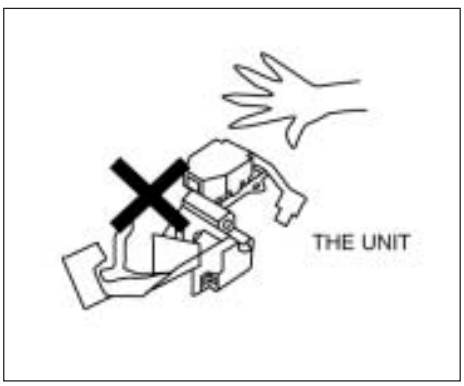

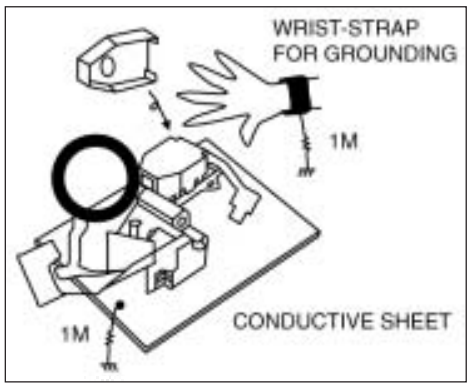

Fig. 1-3

(6) Short the short terminal on the PCB, which is in-side the Pickup Assembly, before replacing the Pickup. (The short terminal is shorted when the Pickup Assembly is being lifted or moved.)

(7) After replacing the Pickup, open the short terminal on the PCB.

2. Pickup Disassembly and Assembly

2-1 Disassembly

1) Remove the power cable.
2) Switch SW3 (on Deck PCB) to "OFF" before disconnecting the PFC (CN6 inserted into Main PCB see Fig. 1-4).
3) Remove the deck.
4) Remove the deck PCB.

2-2 Assembly

1) Replace the Pickup.
2) Refit the deck PCB.
3) Refit the deck.
4) Insert FPC into CN6 (Main PCB) and switch SW3 (on deck PCB) to "ON". (see Fig. 1-4)

Note : If the assembly and disassembly are not done in correct sequence, the Pickup may be damaged.

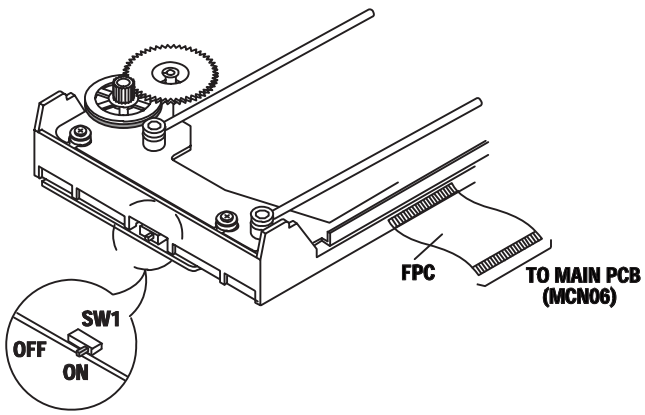

Fig. 1-4

2. Pickup Disassembly and Assembly

2-1 Disassembly

1) Remove the power cable.
2) Switch SW3 (on Deck PCB) to "OFF" before disconnecting the PFC (CN6 inserted into Main PCB see Fig. 1-4).
3) Remove the deck.
4) Remove the deck PCB.

2-2 Assembly

1) Replace the Pickup.
2) Refit the deck PCB.
3) Refit the deck.
4) Insert FPC into CN6 (Main PCB) and switch SW3 (on deck PCB) to "ON". (see Fig. 1-4)

Note : If the assembly and disassembly are not done in correct sequence, the Pickup may be damaged.

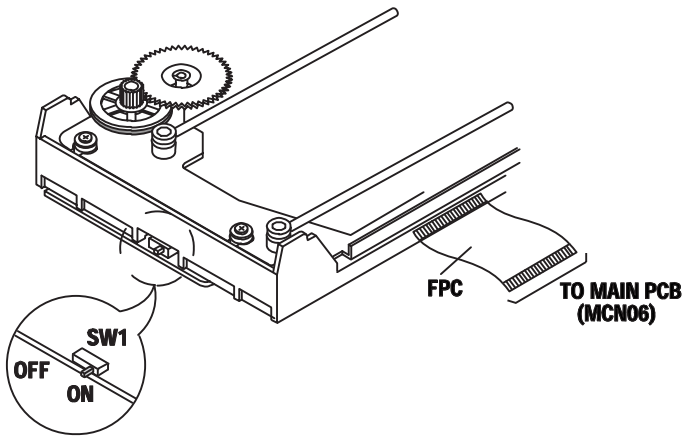

Fig. 1-4

3. Disassembly and Assembly

3-1 Cabinet and PCB

Note : Reassemble in reverse order.

3-1-1 Removing the Top Cabinet

1) Remove 5 screws ❶ on the back of the Top Cabinet.
2) Remove the 4 screws ❷ on the left side and ❸ on the right side.
3) Lift the Top Cabinet up in the direction of the arrow.

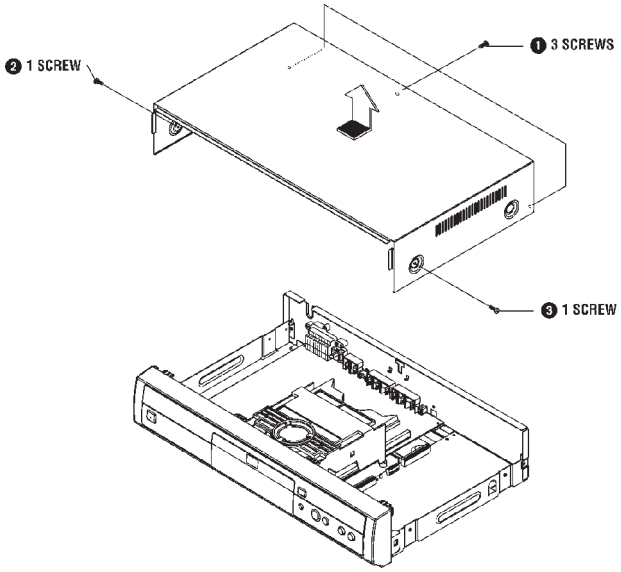

Fig. 3-1 Removing Top Cabinet

3-1-2 Removing the Door-Tray

1) Switch the power on and open the Tray ❶.
2) Pull the Door-Tray ❷ in direction of arrow "A".
3) Close Tray ❶ and Switch the power off.

Note : If Tray ❶ cannot be opened, insert a Screw driver ❹ into the Emergency hole ❸ (as shown in detailed drawing) and then turn it in the direction of arrow "B". Open the Tray manually.

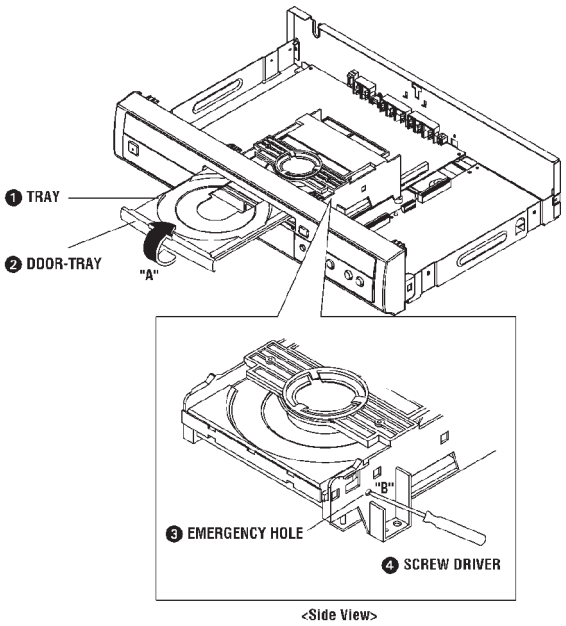

Fig. 3-2 Removing Door-Tray

3-1-3 Removing the Front-Panel Assembly and Key PCB

1) Remove Front-Panel Assembly ❶.
2) Remove 3 screws ❷ and Key PCB ❸.
3) Remove Key Play ❹ and Key Skip ❺.

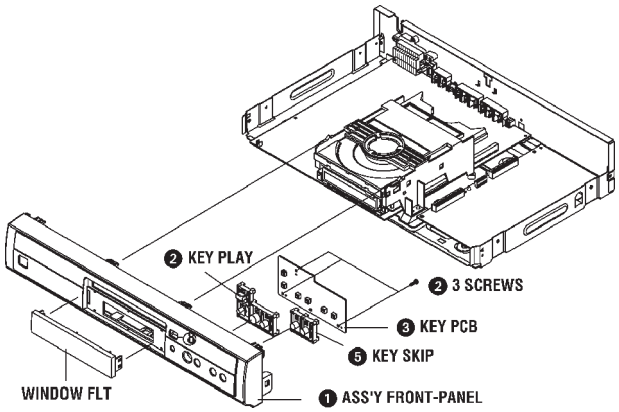

Fig. 3-3 Removing Assembly Front-Panel and Key PCB

3-1-4 Removing the Deck Assembly

1) Remove 4 Screws ❶ from the Assembly Deck and lift it up.

CAUTION :

a) When disassembling, switch the SW3 to "OFF" on the Deck PCB and remove the Flat-Cable connected to DCN1 on Main PCB.
b) When assembling, insert the Flat-Cable into the DCN1 on Main PCB and switch SW3 to "ON" on the Deck PCB.

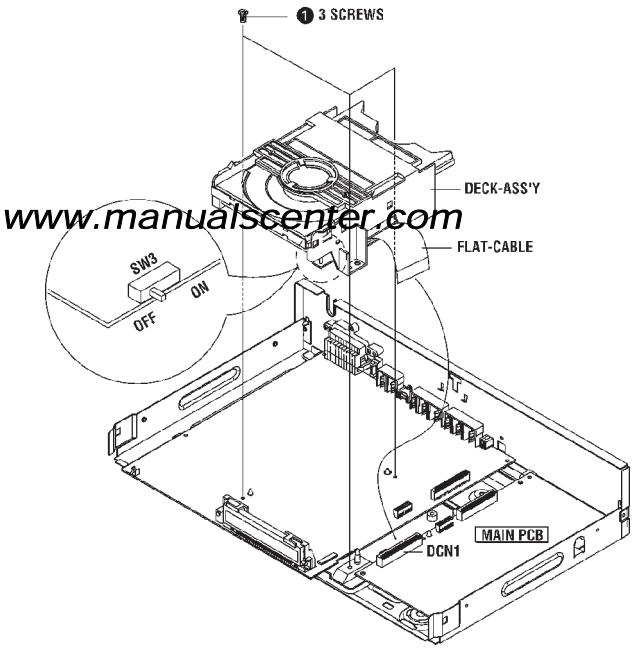

www.manualscenter.com

Fig. 3-4 Removing Deck Assembly

3-1-5 Removing Main PCB and Jack PCB

1) Remove 1 Screw ❶.
2) Remove 2 screws ❷ and lift the Jack PCB ❸.
3) Remove 3 screws ❹ and lift the Main PCB ❺.

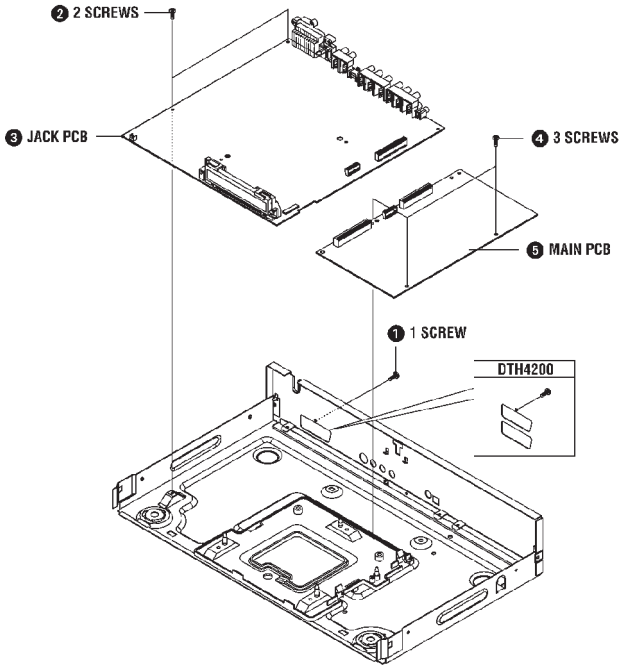

Fig. 3-5 Removing Main PCB and Jack PCB

3-2 PCB Location

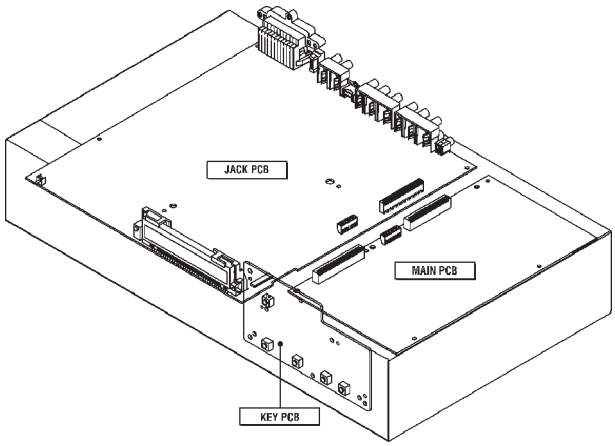

Fig. 3-6 PCB Location

3-3 Connector Diagram

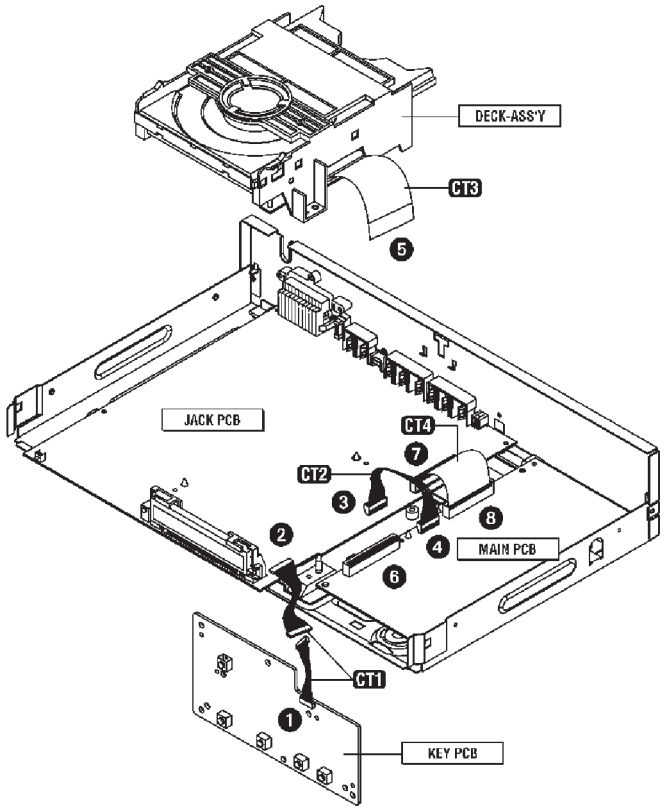

NO.	CONNECTOR NO.	DIRECTION	CONNECTOR NO.	NO.
❶	CON21	KEY PCB ◄CT1► JACK PCB	CN2	❷
❸	PCNS1	JACK PCB ◄CT2► MAIN PCB	PCN1	❹
❺	FPC	DECK-ASS'Y ◄CT3► MAIN PCB	DCN1	❻
❼	CN1	JACK PCB ◄CT4► MAIN PCB	CN8	❽

Fig. 3-7 Connector Diagram

3-4 Deck

3-4-1 Removing PCB Deck Assembly, P/U Deck

1) Remove the soldering of SLED+, SLED- ❶ and TM+, TM- ❷.
2) Disconnect CN3 ❸, CN2 ❹.
3) Remove 1 Screw ❺ and lift up the PCB Deck ❻.
4) Remove 1 Screw ❼.
5) Push the Hook ❽ in the direction of arrow "A" and lift up the P/U Deck Assembly ❾ in the direction of arrow "B".

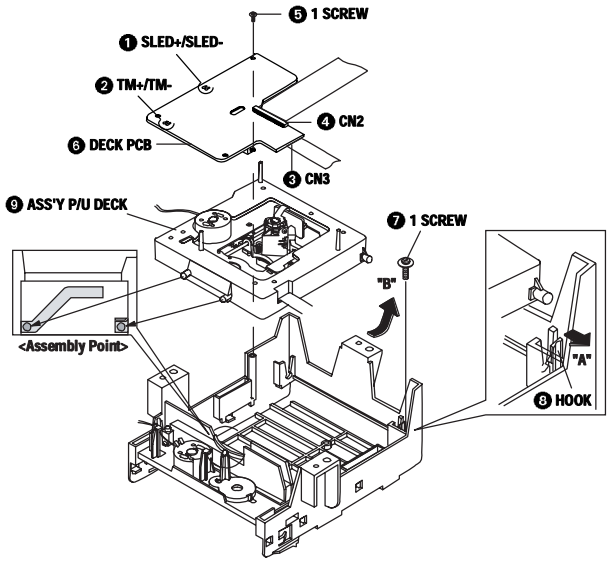

Fig. 3-8 Removing PCB Deck Assembly, P/U Deck

3-4-2 Removing the Tray Disc

1) Insert a Screw Driver ❶ into Emergency Hole ❷ and push the Sider Housing ❸ in the direction of arrow "A".
2) When the Tray Disc ❹ comes out little, pull it in the direction of arrow "B" by hand.
3) Pull the Tray Disc ❹ to disassemble, while simultaneously pushing 2 Stoppers ❺ (left, right) in the direction of arrow "C", "D".

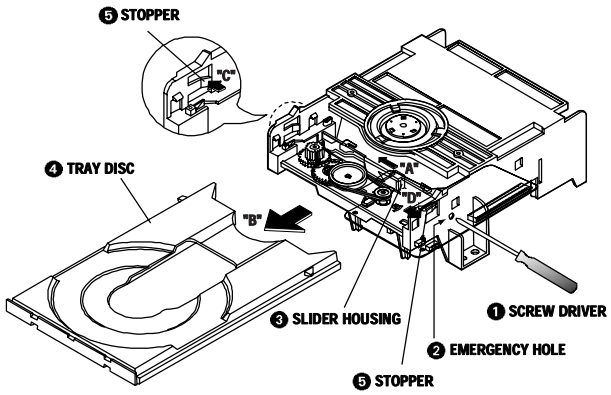

Fig. 3-9 Removing the Tray Disc

3-4-3 Removing Slider Housing

1) Push the Slider Housing ❶ in the direction arrow "A".
2) Lift up the Slider Housing ❷.

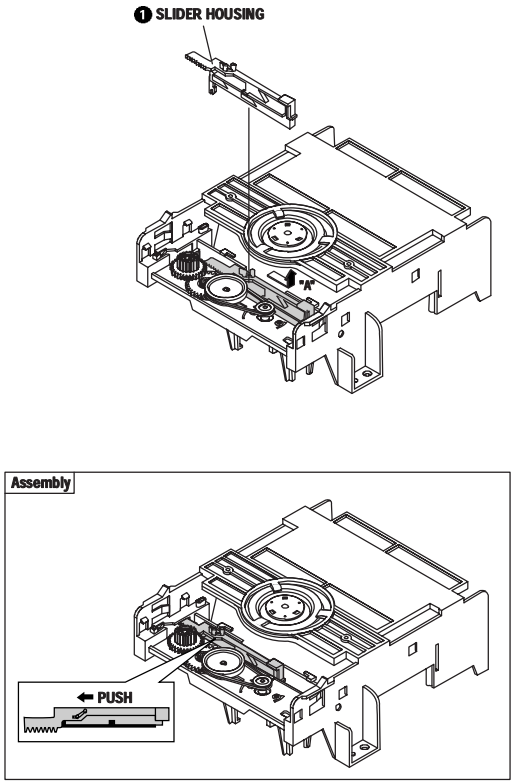

Fig. 3-10 Removing Slider Housing

3-4-4 Removing Housing Assembly

1) Remove Belt ❶ and 1 Screw ❷.
2) Remove 1 screw ❸ and lift up the Pulley Gear ❹.
3) Push the Hook ❺ in the direction arrow "A" and lift up Gear Tray ❻, Gear Housing ❼.
4) Push the 4 Hooks ❽ bottom side in the direction arrow "B" and lift up the Motor Load Assembly ❾.
5) Remove Clamper Assembly ❿.

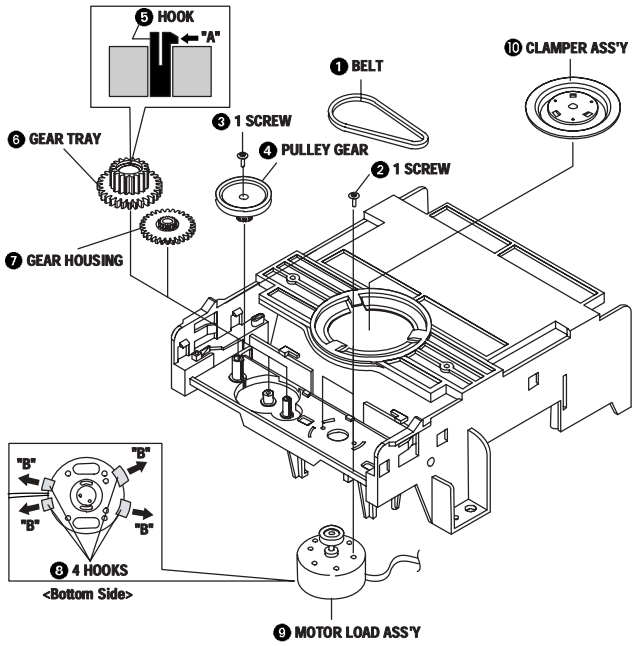

Fig. 3-5 Removing Housing Assembly

3-4-5 Removing Sub Chassis

1) Remove the 4 Screws ❶.
2) Lift up the Assembly Brak Deck ❷.

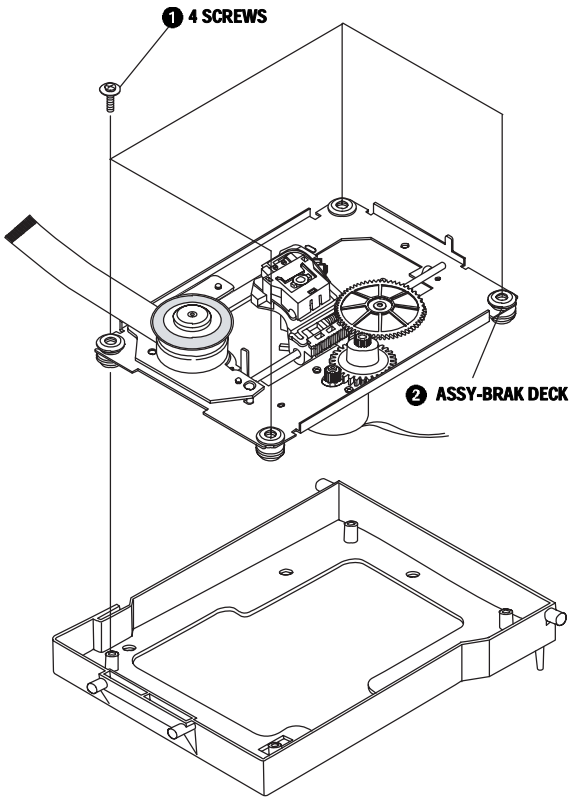

Fig. 3-5 Removing Sub Chassis

GENERAL BLOCK DIAGRAM - SYNOPTIQUE GÉNÉRAL - BLOCKSCHALTBILD ALLGEMEIN - SCHEMA A BLOCCHI GENERALE - ESQUEMA DE BLOQUES GENERAL

DTH4000

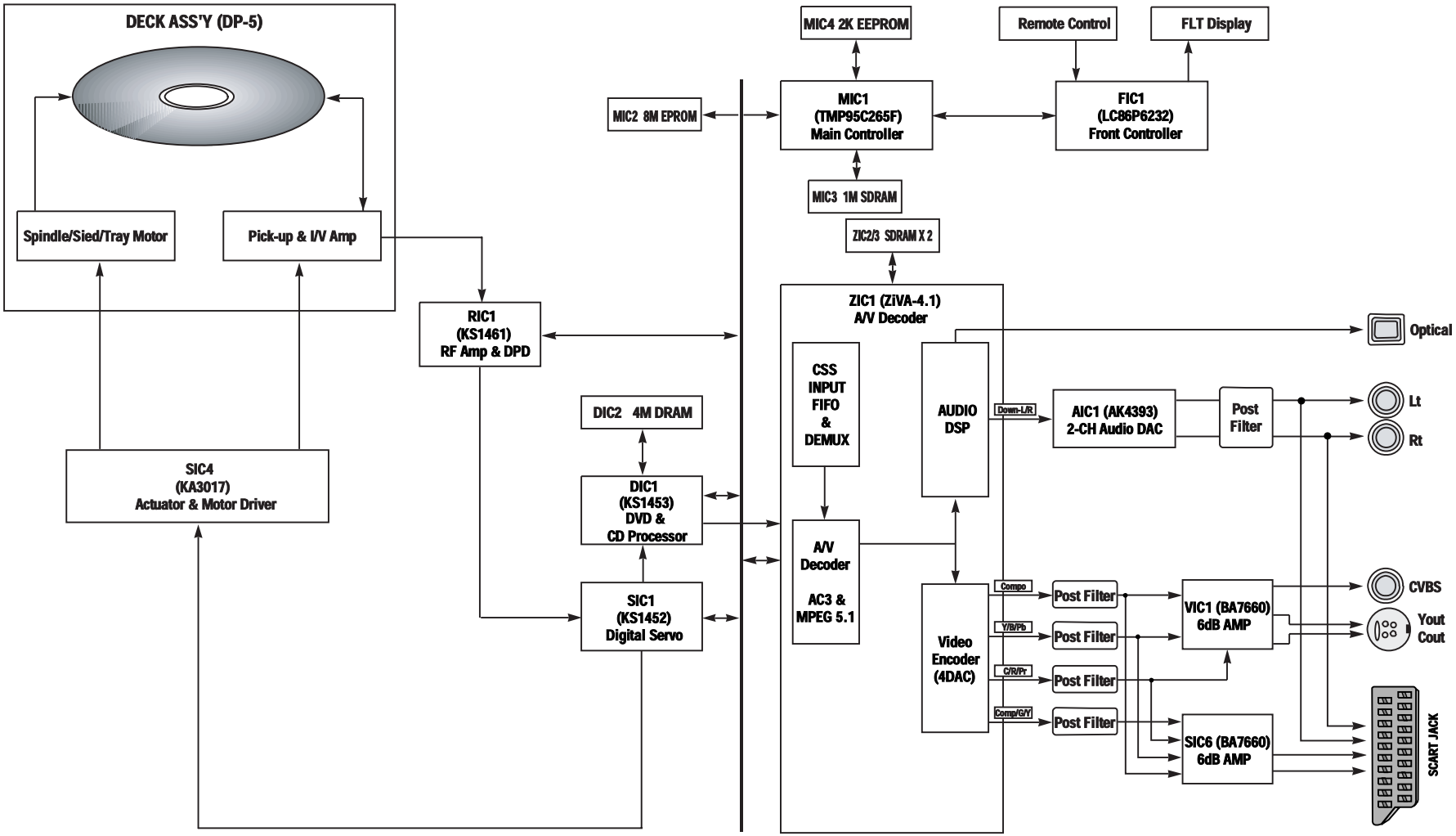

GENERAL BLOCK DIAGRAM - SYNOPTIQUE GÉNÉRAL - BLOCKSCHALTBILD ALLGEMEIN - SCHEMA A BLOCCHI GENERALE - ESQUEMA DE BLOQUES GENERAL

DTH4200

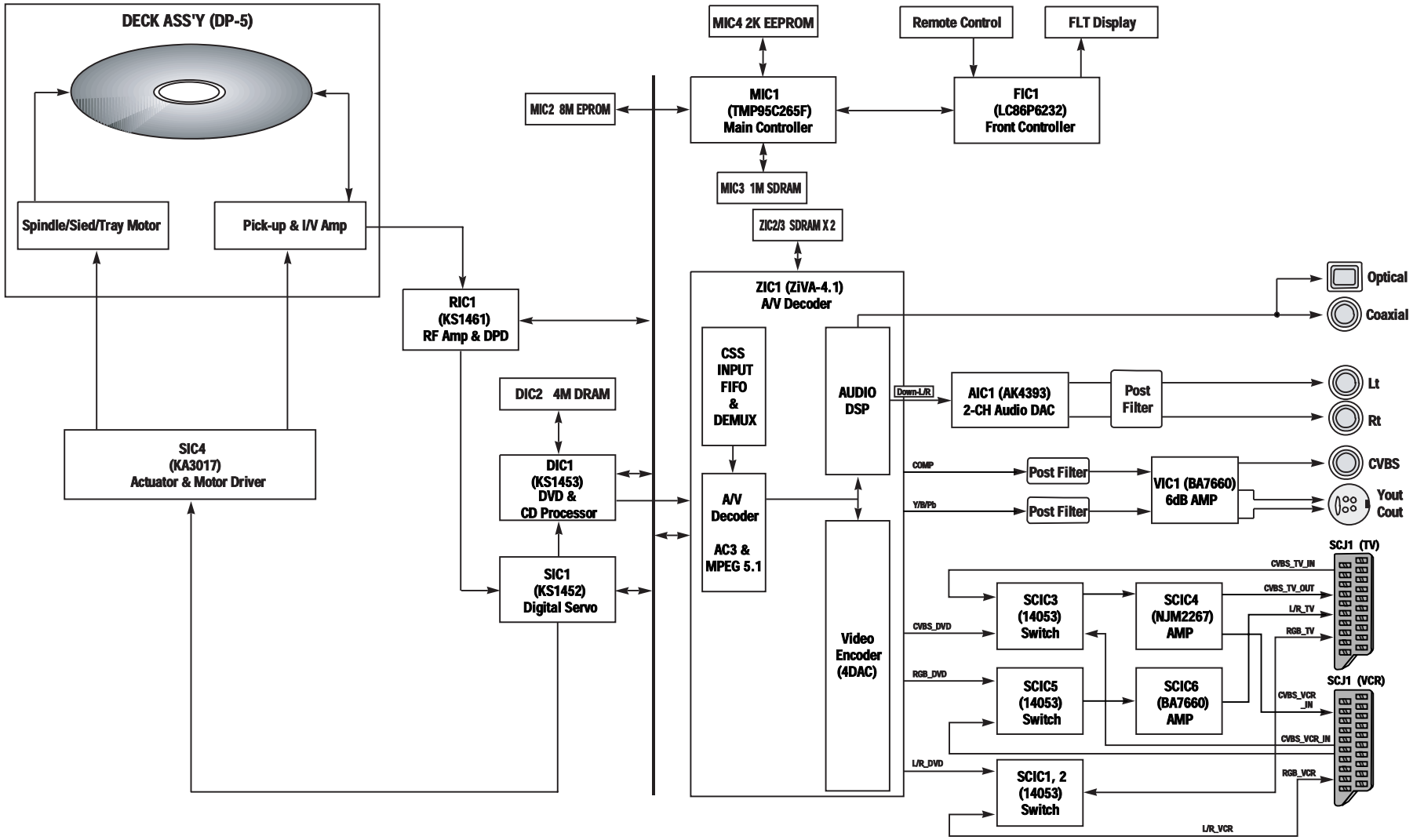

SERVO SCHEMATIC DIAGRAM - SCHEMA DES CIRCUITS D'ASSERVISSEMENTS - SCHALTBILD SERVO - SCHEMA DEI CIRCUITI SERVO - ESQUEMA DE LOS CIRCUITOS SERVO MECANISMO

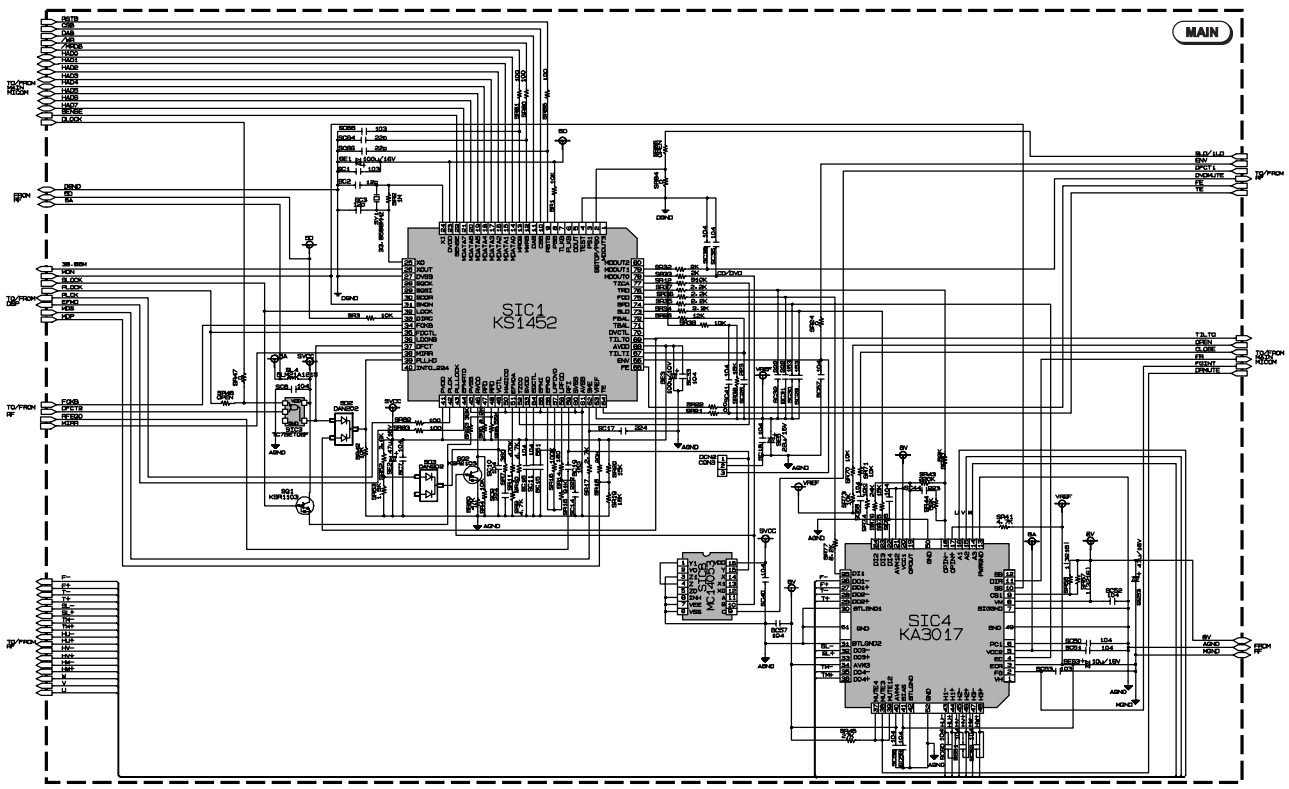

SIC1 (KS1452)

MODE / PIN	DVD PLAY	DVD STOP	CD PLAY	CD STOP
1	0.0	0.0	0.0	0.0
2	0.0	0.0	0.0	0.0
3	0.0	0.0	0.0	0.0
4	0.0	0.0	0.0	0.0
5	4.9	0.0	4.9	0.0
6	0.0	4.9	0.0	4.9
7	1.0	4.9	0.0	4.9
8	4.9	4.9	4.9	4.9
9	4.9	5.0	5.0	5.0
10	4.9	5.0	5.0	5.0
11	4.9	5.0	5.0	5.0
12	4.9	5.0	5.0	5.0
13	4.9	4.9	5.0	4.9
14	2.7	2.6	2.6	2.6
15	2.2	2.2	2.2	2.2
16	2.1	2.1	2.2	2.1
17	2.3	2.5	2.5	2.5
18	2.4	2.6	2.6	2.6
19	2.2	2.4	2.5	2.4
20	2.4	2.4	2.3	2.4
21	2.3	2.2	2.3	2.2
22	4.7	4.9	4.9	4.9
23	4.9	4.9	4.9	4.9
24	2.5	2.5	2.5	2.5
25	2.5	2.5	2.5	2.5
26	2.2	2.2	2.2	2.2
27	0.0	0.0	0.0	0.0
28	4.9	4.9	4.9	4.9
29	0.8	1.4	0.2	1.4
30	0.9	1.4	0.2	1.4
31	4.9	0.0	4.9	0.0
32	4.9	0.0	4.9	0.0
33	4.9	4.9	4.9	4.9
34	0.0	4.9	0.0	4.9
35	4.9	0.0	4.9	0.0
36	0.0	4.9	0.0	4.9
37	0.0	0.0	0.0	0.0
38	0.0	4.9	0.0	4.9
39	0.0	1.9	0.0	1.9
40	2.5	2.5	2.5	2.5

MODE / PIN	DVD PLAY	DVD STOP	CD PLAY	CD STOP
41	4.9	4.9	4.9	4.9
42	2.3	2.0	2.4	2.0
43	4.9	4.9	4.9	4.9
44	2.4	2.5	2.5	2.5
45	0.0	0.0	0.0	0.0
46	2.5	2.9	2.7	2.9
47	1.9	0.0	5.0	0.0
48	4.9	2.9	1.1	2.9
49	2.6	2.8	3.1	2.8
50	0.0	0.0	0.0	0.0
51	2.5	2.5	2.5	2.5
52	2.2	0.0	2.3	0.0
53	4.9	4.9	4.9	4.9
54	2.5	2.7	2.4	2.7
55	0.0	0.0	0.0	0.0
56	2.4	2.5	2.5	2.5
57	2.4	2.5	2.4	2.5
58	2.4	2.5	2.4	2.5
59	2.5	2.5	2.4	2.5
60	0.0	0.0	0.0	0.0
61	0.0	0.0	0.0	0.0
62	2.6	2.5	2.6	2.5
63	2.5	0.0	2.5	0.0
64	2.4	2.5	2.4	2.5
65	2.5	2.5	2.5	2.5
66	3.9	0.0	3.3	0.0
67	2.5	2.5	2.6	2.5
68	4.9	4.9	4.9	4.9
69	0.0	2.4	0.0	2.4
70	2.5	2.5	2.5	2.5
71	2.6	2.5	2.7	2.5
72	2.5	2.5	2.6	2.5
73	2.6	2.5	2.6	2.5
74	2.6	2.5	2.6	2.5
75	2.6	2.5	2.6	2.5
76	2.5	2.5	2.5	2.5
77	2.5	2.4	2.5	2.4
78	4.9	4.9	0.0	4.9
79	0.0	4.9	0.0	4.9
80	0.0	0.0	0.0	0.0

SIC4 (KA3017)

MODE / PIN	DVD PLAY	DVD STOP	CD PLAY	CD STOP
1	0.1	0.1	0.1	0.1
2	2.3	5.0	2.3	5.0
3	2.5	2.5	2.5	2.5
4	2.7	2.5	2.7	2.5
5	5.0	5.0	5.0	5.0
6	0.0	0.0	0.0	0.0
7	0.0	0.0	0.0	0.0
8	7.9	8.0	7.9	8.0
9	7.9	8.0	7.9	8.0
10	5.0	0.0	5.0	0.0
11	0.0	5.0	0.0	5.0
12	0.0	0.0	0.0	0.0
13	0.0	0.0	0.0	0.0
14	5.9	0.0	6.6	0.0
15	6.0	0.0	6.6	0.0
16	5.9	0.0	6.6	0.0
17	2.5	2.5	2.5	2.5
18	2.5	2.5	2.5	2.5
19	2.5	2.5	2.5	2.5
20	7.9	8.0	7.9	8.0
21	7.9	8.0	7.9	8.0
22	2.5	2.5	2.5	2.5
23	2.5	2.5	2.5	2.5
24	2.5	2.5	2.5	2.5
25	2.5	2.5	2.5	2.5
26	3.7	4.0	3.5	4.0
27	4.2	4.0	4.2	4.0
28	4.0	4.0	4.0	4.0
29	4.0	4.0	4.0	4.0
30	0.0	0.0	0.0	0.0
31	0.0	0.0	0.0	0.0
32	3.9	4.0	3.9	4.0
33	3.9	4.0	3.9	4.0
34	7.9	8.0	7.9	8.0
35	4.0	4.0	4.0	4.0
36	3.9	3.9	3.9	3.9
37	0.0	0.0	0.0	0.0
38	0.0	0.0	0.0	0.0
39	0.0	0.0	0.0	0.0
40	7.9	8.0	7.9	8.0
41	2.5	2.5	2.5	2.5
42	0.0	0.0	0.0	0.0
43	2.5	2.6	2.5	2.6
44	2.5	2.5	2.5	2.5
45	2.5	2.6	2.5	2.6
46	2.5	2.4	2.5	2.4
47	2.5	2.4	2.5	2.4
48	2.5	2.4	2.5	2.4

ZIC1 (ZIVA4.1)

MODE / PIN	DVD PLAY	DVD STOP	CD PLAY	CD STOP
1	2.4	2.4	2.4	2.4
2	4.9	4.9	4.9	4.9
3	3.2	3.2	3.2	3.2
4	3.2	3.2	3.2	3.2
5	5.0	5.0	5.0	5.0
6	0.0	0.0	0.0	0.0
7	3.2	3.2	3.2	3.2
8	3.2	3.2	3.2	3.2
9	2.7	2.7	2.7	2.7
10	2.7	2.7	2.7	2.7
11	2.7	2.7	2.7	2.7
12	2.7	2.7	2.7	2.7
13	2.4	2.4	2.4	2.4
14	0.0	0.0	0.0	0.0
15	2.7	2.7	2.7	2.7
16	2.7	2.7	2.7	2.7
17	2.7	2.7	2.7	2.7
18	2.7	2.7	2.7	2.7
19	0.0	0.0	0.0	0.0
20	3.2	3.2	3.2	3.2
21	0.2	0.2	0.2	0.2
22	0.2	0.2	0.2	0.2
23	0.2	0.2	0.2	0.2
24	0.2	0.2	0.2	0.2
25	0.2	0.2	0.2	0.2
26	0.2	0.2	0.2	0.2
27	0.2	0.2	0.2	0.2
28	0.2	0.2	0.2	0.2
29	3.2	3.2	3.2	3.2
30	2.7	2.7	2.7	2.7
31	0.0	0.0	0.0	0.0
32	3.2	3.2	3.2	3.2
33	3.2	3.2	3.2	3.2
34	3.2	3.2	3.2	3.2
35	3.2	3.2	3.2	3.2
36	3.2	3.2	3.2	3.2
37	0.0	0.0	0.0	0.0
38	3.2	3.2	3.2	3.2
39	3.2	3.2	3.2	3.2
40	3.2	3.2	3.2	3.2
41	3.2	3.2	3.2	3.2
42	3.2	3.2	3.2	3.2
43	0.0	0.0	0.0	0.0
44	0.0	0.0	0.0	0.0
45	3.2	3.2	3.2	3.2
46	0.0	0.0	0.0	0.0
47	0.0	0.0	0.0	0.0
48	0.0	0.0	0.0	0.0
49	0.0	0.0	0.0	0.0
50	0.0	0.0	0.0	0.0
51	0.0	0.0	0.0	0.0
52	0.0	0.0	0.0	0.0
53	0.8	0.8	0.8	0.8
54	1.0	1.0	1.0	1.0
55	3.2	3.2	3.2	3.2
56	0.0	0.0	0.0	0.0
57	1.2	0.9	1.2	0.9
58	1.2	0.9	1.2	0.9
59	1.2	0.9	1.2	0.9
60	1.2	0.9	1.2	0.9
61	1.2	0.9	1.2	0.9
62	1.2	0.9	1.2	0.9
63	1.2	0.9	1.2	0.9
64	3.2	3.2	3.2	3.2
65	0.0	0.0	0.0	0.0
66	1.4	0.9	1.4	0.9
67	2.4	2.4	2.4	2.4
68	0.0	0.0	0.0	0.0
69	1.4	0.9	1.4	0.9
70	1.4	0.9	1.4	0.9
71	1.4	0.9	1.4	0.9
72	1.4	0.9	1.4	0.9
73	1.4	0.9	1.4	0.9
74	3.2	3.2	3.2	3.2
75	0.0	0.0	0.0	0.0
76	1.4	0.9	1.4	0.9
77	0.0	0.0	0.0	0.0
78	1.6	1.6	1.6	1.6
79	3.2	3.2	3.2	3.2
80	0.8	0.5	0.6	0.5
81	0.8	0.5	0.6	0.4
82	3.2	3.2	3.2	3.2
83	0.0	0.0	0.0	0.0
84	1.4	0.9	1.4	0.9
85	1.4	0.9	1.4	0.9
86	1.4	0.9	1.4	0.9
87	3.2	3.2	3.2	3.2
88	0.0	0.0	0.0	0.0
89	1.3	1.5	1.3	1.5
90	3.1	3.1	3.1	3.1
91	1.5	1.5	1.5	1.5
92	3.2	3.2	3.2	3.2
93	0.0	0.0	0.0	0.0
94	2.7	2.4	2.7	2.4
95	2.1	2.3	2.1	2.3
96	3.1	3.1	3.0	3.0
97	1.2	1.3	1.2	1.3
98	0.3	0.3	0.3	0.3
99	0.4	0.7	0.4	0.7
100	3.2	3.2	3.2	3.2
101	0.0	0.0	0.0	0.0
102	1.4	1.2	1.4	1.2
103	1.4	1.4	1.4	1.4
104	1.4	1.4	1.4	1.4
105	0.0	0.0	0.0	0.0
106	0.0	0.0	0.0	0.0
107	0.0	0.0	0.0	0.0
108	0.0	0.0	0.0	0.0
109	0.2	0.2	0.2	0.2
110	0.0	0.0	0.0	0.0
111	3.2	3.2	3.2	3.2
112	3.2	3.2	3.2	3.2
113	1.6	1.6	1.6	1.6
114	1.6	1.6	1.6	1.6
115	3.2	3.2	3.2	3.2
116	0.0	0.0	0.0	0.0
117	0.0	0.0	0.0	0.0
118	0.0	0.0	0.0	0.0
119	0.0	0.0	0.0	0.0
120	1.6	0.0	1.6	0.0
121	1.6	0.0	1.6	0.0
122	1.6	1.6	1.6	1.6
123	3.2	3.2	3.2	3.2
124	0.0	0.0	0.0	0.0
125	1.6	1.6	1.6	1.6
126	1.6	1.6	1.6	1.6
127	1.6	1.6	1.6	1.6
128	2.4	2.4	2.4	2.4
129	0.0	0.0	0.0	0.0
130	0.0	0.0	0.0	0.0
131	0.0	0.0	0.0	0.0
132	0.0	0.0	0.0	0.0
133	0.6	0.5	0.6	0.5
134	3.2	3.2	3.2	3.2
135	3.2	3.2	3.2	3.2

ZIVA SCHEMATIC DIAGRAM - SCHEMA DES CIRCUITS ZIVA - SCHALTBILD ZIVA - SCHEMA DEI CIRCUITI ZIVA - ESQUEMA DE LOS CIRCUITOS ZIVA

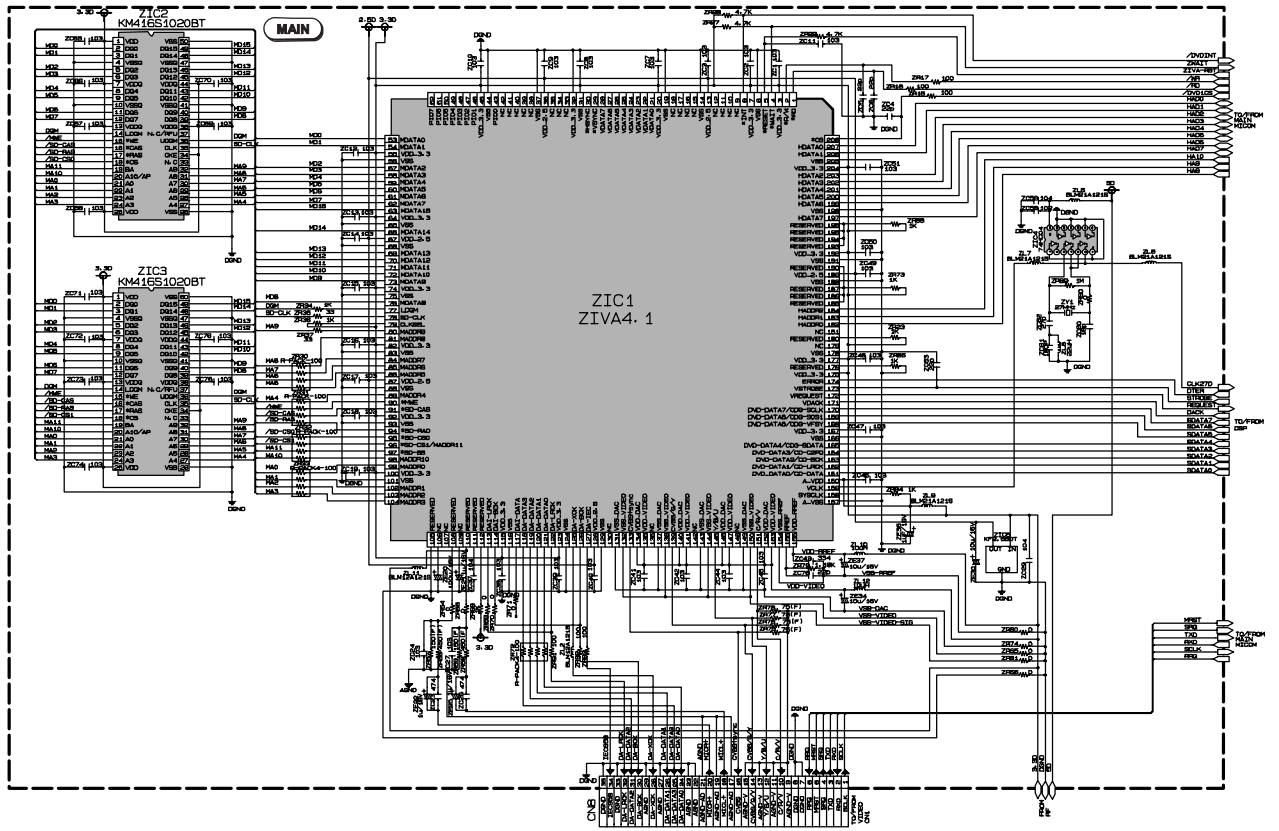

ZIC1 (ZIVA4.1)

MODE / PIN	DVD		CD	
	PLAY	STOP	PLAY	STOP
136	0.0	0.0	0.0	0.0
137	0.0	0.0	0.0	0.0
138	0.0	0.0	0.0	0.0
139	0.6	0.5	0.6	0.5
140	3.2	3.2	3.2	3.2
141	3.2	3.2	3.2	3.2
142	0.0	0.0	0.0	0.0
143	0.0	0.0	0.0	0.0
144	0.0	0.0	0.0	0.0
145	0.7	0.5	0.7	0.5
146	3.2	3.2	3.2	3.2
147	3.2	3.2	3.2	3.2
148	0.0	0.0	0.0	0.0
149	0.0	0.0	0.0	0.0
150	0.0	0.0	0.0	0.0
151	0.5	0.5	0.5	0.5
152	3.2	3.2	3.2	3.2
153	3.2	3.2	3.2	3.2
154	0.0	0.0	0.0	0.0
155	1.3	1.3	1.3	1.3
156	3.2	3.2	3.2	3.2
157	0.0	0.0	0.0	0.0
158	3.2	3.2	3.2	3.2
159	1.6	1.6	1.6	1.6
160	3.2	3.2	3.2	3.2
161	2.5	0.0	2.5	0.0
162	2.5	0.0	2.5	0.0
163	2.5	0.0	2.5	0.0
164	2.5	0.0	2.5	0.0
165	2.5	0.0	2.5	0.0
166	0.0	0.0	0.0	0.0
167	3.2	3.2	3.2	3.2
168	2.5	0.0	2.5	0.0
169	2.5	0.0	2.5	0.0
170	2.5	0.0	2.5	0.0
171	4.0	5.0	5.0	5.0
172	2.5	2.0	2.5	1.6
173	2.4	2.4	2.4	2.4
174	0.0	0.0	0.0	0.0
175	3.2	3.2	3.2	3.2
176	0.0	0.0	0.0	0.0
177	3.2	3.2	3.2	3.2
178	0.0	0.0	0.0	0.0
179	3.2	3.2	3.2	3.2
180	0.0	0.0	0.0	0.0

MODE / PIN	DVD		CD	
	PLAY	STOP	PLAY	STOP
181	3.2	3.2	3.2	3.2
182	2.5	2.5	2.5	2.5
183	2.5	2.5	2.5	2.5
184	2.5	2.5	2.5	2.5
185	3.2	3.2	3.2	3.2
186	3.2	3.2	3.2	3.2
187	3.2	3.2	3.2	3.2
188	0.0	0.0	0.0	0.0
189	3.2	3.2	3.2	3.2
190	3.2	3.2	3.2	3.2
191	0.0	0.0	0.0	0.0
192	3.2	3.2	3.2	3.2
193	3.2	3.2	3.2	3.2
194	3.2	3.2	3.2	3.2
195	3.2	3.2	3.2	3.2
196	3.2	3.2	3.2	3.2
197	2.4	2.3	2.4	2.3
198	0.0	0.0	0.0	0.0
199	2.2	2.2	2.2	2.2
200	2.0	2.0	2.0	2.0
201	1.6	1.6	1.6	1.6
202	1.6	1.6	1.6	1.6
203	1.8	2.0	1.8	2.0
204	3.2	3.2	3.2	3.2
205	0.0	0.0	0.0	0.0
206	1.6	1.6	1.6	1.6
207	1.6	1.6	1.6	1.6
208	4.9	5.0	4.9	5.0

ZIC2,3 (KM416S1120D)

MODE / PIN	DVD		CD	
	PLAY	STOP	PLAY	STOP
1	3.2	3.2	3.2	3.2
2	1.0	0.7	1.0	0.7
3	1.0	0.7	1.0	0.7
4	0.0	0.0	0.0	0.0
5	1.0	1.0	1.0	1.0
6	0.9	0.9	0.9	0.9
7	3.2	3.2	3.2	3.2
8	1.3	0.7	0.6	0.8
9	1.0	1.0	0.8	1.2
10	0.0	0.0	0.0	0.0
11	1.0	1.0	0.6	1.1
12	1.6	1.0	0.6	1.2
13	3.2	3.2	3.2	3.2
14	0.0	0.0	0.0	0.0
15	3.0	3.1	3.0	3.1
16	1.4	1.5	1.4	1.5
17	2.7	2.4	3.2	2.6
18	2.2	2.3	2.2	2.3
19	1.2	1.1	1.2	1.1
20	0.5	0.7	0.5	0.7
21	0.5	0.7	0.5	0.7
22	1.4	1.2	1.4	1.2
23	1.4	1.4	1.4	1.4
24	1.3	1.3	1.3	1.3
25	3.2	3.2	3.2	3.2
26	0.0	0.0	0.0	0.0
27	1.4	1.5	1.4	1.5
28	1.5	1.5	1.5	1.5
29	1.4	1.2	1.4	1.2
30	1.4	1.3	1.4	1.3
31	0.7	0.6	0.7	0.6
32	0.0	0.0	0.0	0.0
33	0.0	0.0	0.0	0.0
34	3.2	3.2	3.2	3.2
35	1.6	1.6	1.6	1.6
36	0.0	0.0	0.0	0.0
37	0.0	0.0	0.0	0.0
38	3.2	3.2	3.2	3.2
39	1.2	0.7	1.2	0.7
40	1.3	0.8	1.2	0.8
41	0.0	0.0	0.0	0.0
42	1.1	0.4	1.1	0.4
43	1.1	0.5	1.1	0.5
44	3.2	3.2	3.2	3.2
45	1.3	1.0	1.3	1.0
46	1.4	1.0	1.4	1.0
47	0.0	0.0	0.0	0.0
48	1.0	0.9	1.0	0.9
49	1.0	0.7	1.0	0.7
50	0.0	0.0	0.0	0.0

RIC1 (KS1461)

MODE / PIN	DVD		CD	
	PLAY	STOP	PLAY	STOP
1	2.6	2.5	2.5	2.5
2	2.6	2.5	2.5	2.5
3	2.6	2.5	2.5	2.5
4	2.6	2.5	2.5	2.5
5	2.6	2.5	2.5	2.5
6	2.6	2.5	2.5	2.5
7	2.6	2.5	2.5	2.5
8	2.6	2.5	2.5	2.5
9	1.2	1.2	1.2	1.2
10	1.2	1.3	1.2	1.3
11	1.2	1.2	1.2	1.2
12	2.4	2.5	2.5	2.5
13	2.8	2.5	2.8	2.5
14	2.8	2.5	2.8	2.5
15	2.6	2.5	2.6	2.5
16	2.7	2.5	2.6	2.5
17	2.7	2.5	2.6	2.5
18	2.4	2.5	2.6	2.5
19	2.4	2.5	2.5	2.5
20	2.4	2.5	2.5	2.5
21	2.4	2.5	2.5	2.5
22	2.4	2.5	2.5	2.5
23	4.9	4.9	4.9	4.9
24	2.5	2.5	2.5	2.5
25	2.6	2.5	2.5	2.5
26	4.9	4.9	4.9	4.9
27	0.8	0.8	0.8	0.8
28	3.4	4.9	3.4	4.9
29	0.2	0.0	0.2	0.0
30	4.9	4.9	4.9	4.9
31	0.0	0.0	0.3	0.3
32	0.0	0.0	0.0	0.0
33	2.6	2.5	2.5	2.5
34	2.5	2.5	2.5	2.5
35	2.5	2.5	2.5	2.5
36	2.5	2.5	2.5	2.5
37	1.3	1.3	1.3	1.3
38	2.7	2.2	2.5	2.2
39	3.4	1.6	2.7	1.6
40	2.5	2.5	2.5	2.5
41	3.1	2.5	3.1	2.5
42	1.9	2.5	2.0	2.5
43	3.5	0.0	3.3	0.0
44	0.0	0.0	0.0	0.0
45	3.0	3.0	3.0	3.0

MODE / PIN	DVD		CD	
	PLAY	STOP	PLAY	STOP
46	0.0	4.9	0.0	4.9
47	3.4	1.7	3.2	1.7
48	3.4	1.7	3.3	1.7
49	3.4	1.7	3.3	1.7
50	3.4	1.7	3.3	1.7
51	4.9	4.9	5.0	4.9
52	1.2	1.2	1.2	1.2
53	1.2	1.2	1.2	1.2
54	0.0	0.0	0.0	0.0
55	0.0	0.0	0.0	0.0
56	4.9	4.9	4.9	4.9
57	0.4	4.9	0.4	4.9
58	0.0	0.0	0.0	0.0
59	2.5	2.5	2.5	2.5
60	2.4	2.5	0.5	2.5
61	2.4	2.5	0.6	2.5
62	0.3	4.9	4.9	0.3
63	0.0	4.9	0.0	4.9
64	2.4	2.4	2.4	2.4
65	1.2	1.2	1.2	1.2
66	0.0	0.0	0.0	0.0
67	2.4	2.5	2.4	2.5
68	1.2	1.2	1.2	1.2
69	2.5	0.0	2.5	0.0
70	2.5	4.9	2.5	4.9
71	2.5	0.0	2.5	0.0
72	0.6	0.6	0.6	0.6
73	4.9	4.9	4.9	4.9
74	2.5	2.5	2.5	2.5
75	2.4	2.5	2.4	2.5
76	2.8	1.2	3.6	1.2
77	2.7	1.4	4.0	1.4
78	3.0	0.7	3.4	0.7
79	2.9	0.7	4.3	0.7
80	2.6	1.7	3.2	1.7
81	1.8	1.8	2.0	1.8
82	1.9	2.5	1.7	2.5
83	2.9	2.5	3.0	2.5
84	2.4	2.5	2.5	2.5
85	4.9	4.9	4.9	4.9
86	2.6	2.7	2.7	2.7
87	4.9	4.9	4.9	4.9
88	2.4	2.5	2.4	2.5
89	2.5	2.6	2.6	2.6
90	2.3	4.3	1.6	4.3

MODE / PIN	DVD		CD	
	PLAY	STOP	PLAY	STOP
91	2.4	2.5	2.5	2.5
92	0.0	0.0	0.0	0.0
93	3.5	3.5	3.5	3.5
94	2.0	2.5	2.0	2.5
95	3.0	2.5	3.1	2.5
96	1.0	1.0	1.0	1.0
97	1.9	2.0	2.0	2.0
98	2.5	2.5	2.5	2.5
99	2.4	2.5	2.5	2.5
100	5.0	5.0	5.0	5.0

www.manualscenter.com

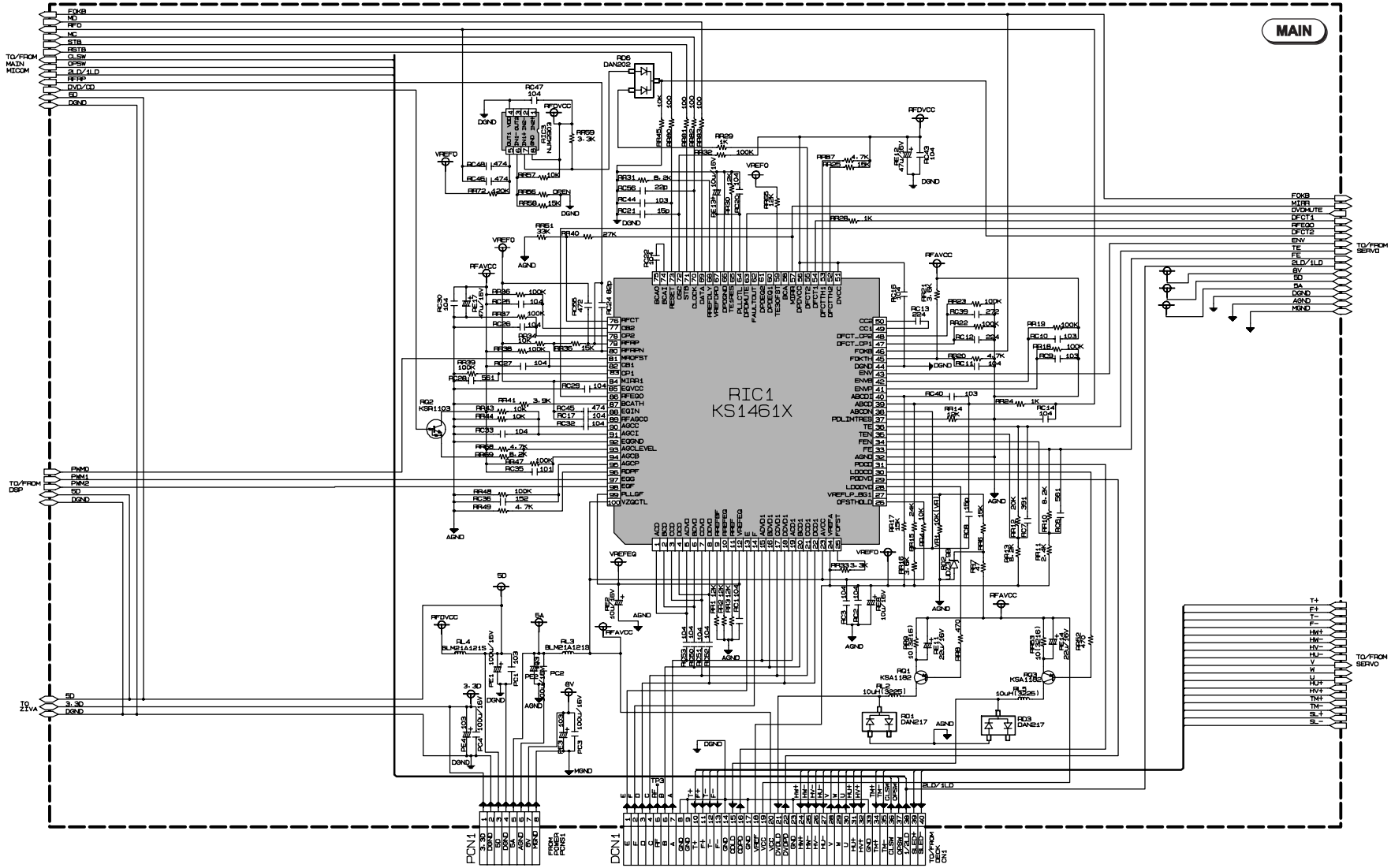

DATA PROCESSING SCHEMATIC DIAGRAM - SCHEMA DU TRAITEMENT DES DATA - SCHALTBILD DATA-VERARBEITUNG - SCHEMA ELABORAZIONE DATA - ESQUEMA DEL TRATAMIENTO DATA

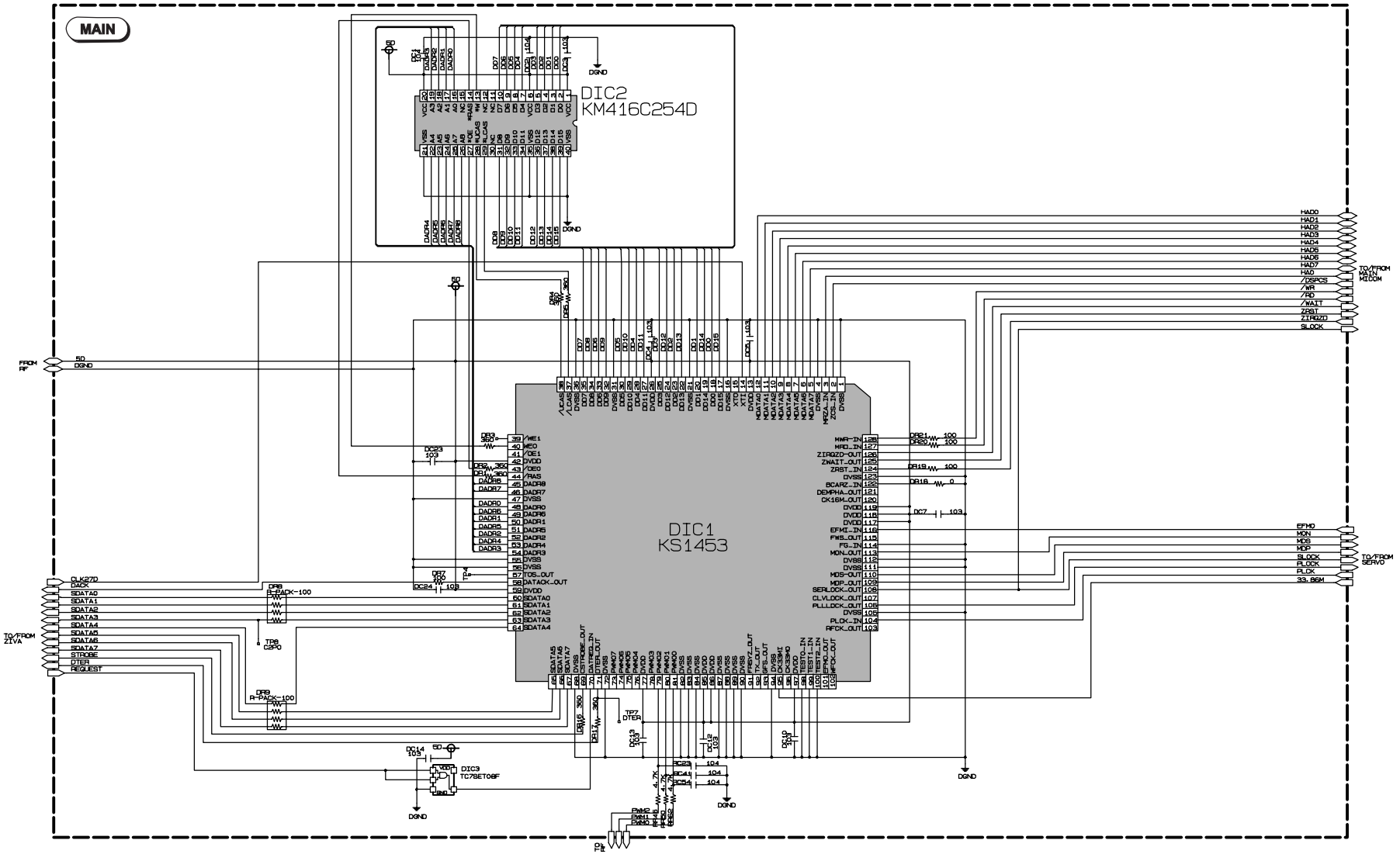

DIC1 (KA1453)

MODE / PIN	DVD		CD	
	PLAY	STOP	PLAY	STOP
1	0.0	0.0	0.0	0.0
2	2.3	2.3	2.3	2.3
3	2.3	2.3	2.1	2.3
4	0.0	0.0	0.0	0.0
5	2.3	2.2	2.2	2.2
6	2.4	2.4	2.3	2.4
7	2.2	2.4	2.6	2.4
8	2.3	2.6	2.1	2.6
9	1.5	2.5	1.5	2.5
10	2.1	2.1	2.5	2.1
11	2.2	2.2	1.6	2.2
12	2.7	2.6	2.2	2.6
13	4.9	4.9	4.9	4.9
14	1.5	1.6	1.5	1.6
15	2.9	2.8	2.9	2.8
16	0.0	0.0	0.0	0.0
17	1.7	0.2	0.0	0.2
18	1.4	0.1	2.2	0.1
19	1.4	0.0	0.0	0.0
20	1.4	0.0	2.2	0.0
21	0.0	0.0	0.0	0.0
22	1.4	0.0	0.0	0.0
23	1.4	0.0	2.2	0.0
24	1.4	0.0	0.0	0.0
25	1.4	0.0	2.2	0.0
26	4.9	4.9	4.9	4.9
27	1.4	0.0	0.0	0.0
28	1.4	0.0	0.0	0.0
29	1.4	0.0	0.0	0.0
30	1.4	0.0	2.2	0.0
31	0.0	0.0	0.0	0.0
32	1.4	0.0	0.0	0.0
33	1.4	0.0	2.2	0.0
34	1.4	0.2	0.0	0.2
35	1.4	0.0	2.2	0.0
36	0.0	0.0	0.0	0.0
37	3.6	3.6	4.8	3.6
38	3.6	3.6	4.8	3.6
39	4.9	4.9	4.9	4.9
40	4.6	4.9	4.9	4.9
41	4.9	4.9	4.9	4.9
42	4.9	4.9	4.9	4.9
43	4.4	4.9	4.7	4.9

MODE / PIN	DVD		CD	
	PLAY	STOP	PLAY	STOP
44	2.4	2.4	4.7	2.4
45	1.4	0.0	0.0	0.0
46	1.4	0.0	0.0	0.0
47	0.0	0.0	0.0	0.0
48	1.4	0.0	0.3	0.0
49	1.4	0.0	0.0	0.0
50	1.4	0.0	0.3	0.0
51	1.4	0.0	0.0	0.0
52	1.4	0.0	0.2	0.0
53	1.4	0.0	0.2	0.0
54	1.4	0.0	0.2	0.0
55	0.0	0.0	0.0	0.0
56	0.0	0.0	0.0	0.0
57	4.9	4.9	4.9	4.9
58	4.9	4.9	4.9	4.9
59	4.9	4.9	4.9	4.9
60	3.3	4.9	1.6	4.9
61	4.6	0.0	2.1	0.0
62	4.8	0.0	2.4	0.0
63	4.8	0.0	0.0	0.0
64	4.8	0.0	0.0	0.0
65	4.8	0.0	2.5	0.0
66	4.8	0.0	0.0	0.0
67	4.8	0.0	0.3	0.0
68	0.0	0.0	0.0	0.0
69	2.4	2.4	4.9	4.9
70	2.8	0.0	0.0	0.0
71	0.0	0.0	0.0	0.0
72	0.0	0.0	0.0	0.0
73	2.5	2.5	2.5	2.5
74	2.5	2.5	2.5	2.5
75	2.5	2.5	2.5	2.5
76	2.5	2.5	2.5	2.5
77	2.5	2.5	2.5	2.5
78	2.5	2.5	2.5	2.5
79	2.2	2.2	2.6	2.2
80	1.6	1.6	1.6	1.6
81	1.8	1.8	2.2	1.8
82	0.0	0.0	0.0	0.0
83	0.0	0.0	0.0	0.0
84	0.0	0.0	0.0	0.0
85	4.9	4.9	4.9	4.9
86	4.9	4.9	4.9	4.9

MODE / PIN	DVD		CD	
	PLAY	STOP	PLAY	STOP
87	0.0	0.0	0.0	0.0
88	0.0	0.0	0.0	0.0
89	0.0	0.0	0.0	0.0
90	0.0	0.0	0.0	0.0
91	4.9	4.9	4.9	4.9
92	0.4	0.2	2.4	0.2
93	4.8	0.0	4.9	0.0
94	0.0	0.0	0.0	0.0
95	2.3	2.4	2.3	2.4
96	2.4	2.4	2.4	2.4
97	4.9	4.9	4.9	4.9
98	0.0	0.0	0.0	0.0
99	0.0	0.0	0.0	0.0
100	0.0	0.0	0.0	0.0
101	2.4	2.8	2.5	2.8
102	2.4	2.4	2.5	2.4
103	2.4	2.4	2.5	2.4
104	2.3	2.1	2.4	2.1
105	0.0	0.0	0.0	0.0
106	4.9	0.0	4.9	0.0
107	4.9	0.0	4.9	0.0
108	4.9	0.0	4.9	0.0
109	2.6	2.4	2.6	2.4
110	2.5	2.4	2.5	2.4
111	0.0	0.0	0.0	0.0
112	0.0	0.0	0.0	0.0
113	4.9	0.0	4.9	0.0
114	4.9	0.0	4.9	0.0
115	0.4	0.0	0.4	0.0
116	2.4	2.5	2.5	2.5
117	4.9	4.9	4.9	4.9
118	4.9	4.9	4.9	4.9
119	4.9	4.9	4.9	4.9
120	2.1	2.2	2.1	2.2
121	0.0	0.0	0.0	0.0
122	0.0	0.0	0.0	0.0
123	0.0	0.0	0.0	0.0
124	4.9	4.9	4.9	4.9
125	4.9	4.9	4.9	4.9
126	4.7	4.7	4.9	4.7
127	2.1	2.2	2.1	2.2
128	4.9	5.0	5.0	5.0

DIC2 (KM416C254D)

MODE / PIN	DVD		CD	
	PLAY	STOP	PLAY	STOP
1	5.0	5.0	5.0	5.0
2	0.3	0.3	2.2	2.5
3	0.3	0.3	2.4	2.4
4	0.3	0.3	2.4	2.6
5	0.3	0.3	2.4	2.5
6	5.0	5.0	5.0	5.0
7	0.3	0.3	2.3	2.5
8	0.3	0.3	2.4	2.3
9	0.3	0.3	0.0	0.0
10	0.3	0.3	2.3	0.0
11	0.0	0.0	0.0	0.0
12	0.0	0.0	0.0	0.0
13	5.0	5.0	4.9	4.9
14	2.5	2.5	4.8	4.8
15	0.0	0.0	0.0	0.0
16	0.0	0.0	0.3	0.3
17	0.0	0.0	0.2	0.3
18	0.0	0.0	0.2	0.3
19	0.0	0.0	0.2	0.3
20	0.0	5.0	0.0	5.0
21	0.0	0.0	0.0	0.0
22	1.2	0.0	0.3	0.2
23	1.0	0.0	0.1	0.1
24	0.0	0.0	0.1	0.1
25	0.0	0.0	0.1	0.1
26	0.0	0.0	0.0	0.0
27	4.9	3.8	4.8	4.8
28	3.7	3.8	4.8	4.9
29	3.7	3.8	4.9	4.9
30	0.1	0.0	0.1	0.1
31	1.1	0.9	0.0	0.0
32	1.1	0.9	0.0	1.2
33	1.1	0.9	0.0	1.3
34	1.1	0.8	0.0	1.4
35	0.0	0.0	0.0	0.0
36	1.0	1.0	0.0	1.4
37	1.1	0.9	0.0	1.5
38	1.1	0.9	0.0	0.0
39	1.0	0.8	1.6	1.4
40	0.0	0.0	0.0	0.0

SYSTEM CONTROL SCHEMATIC DIAGRAM - SCHEMA DES CIRCUITS DE GESTION - SCHALTBILD MECHANIKSTEUERUNG - SCHEMA DEI CIRCUITI CONTROLLO MECCANICA - ESQUEMA DE LOS CIRCUITOS GESTIÓN

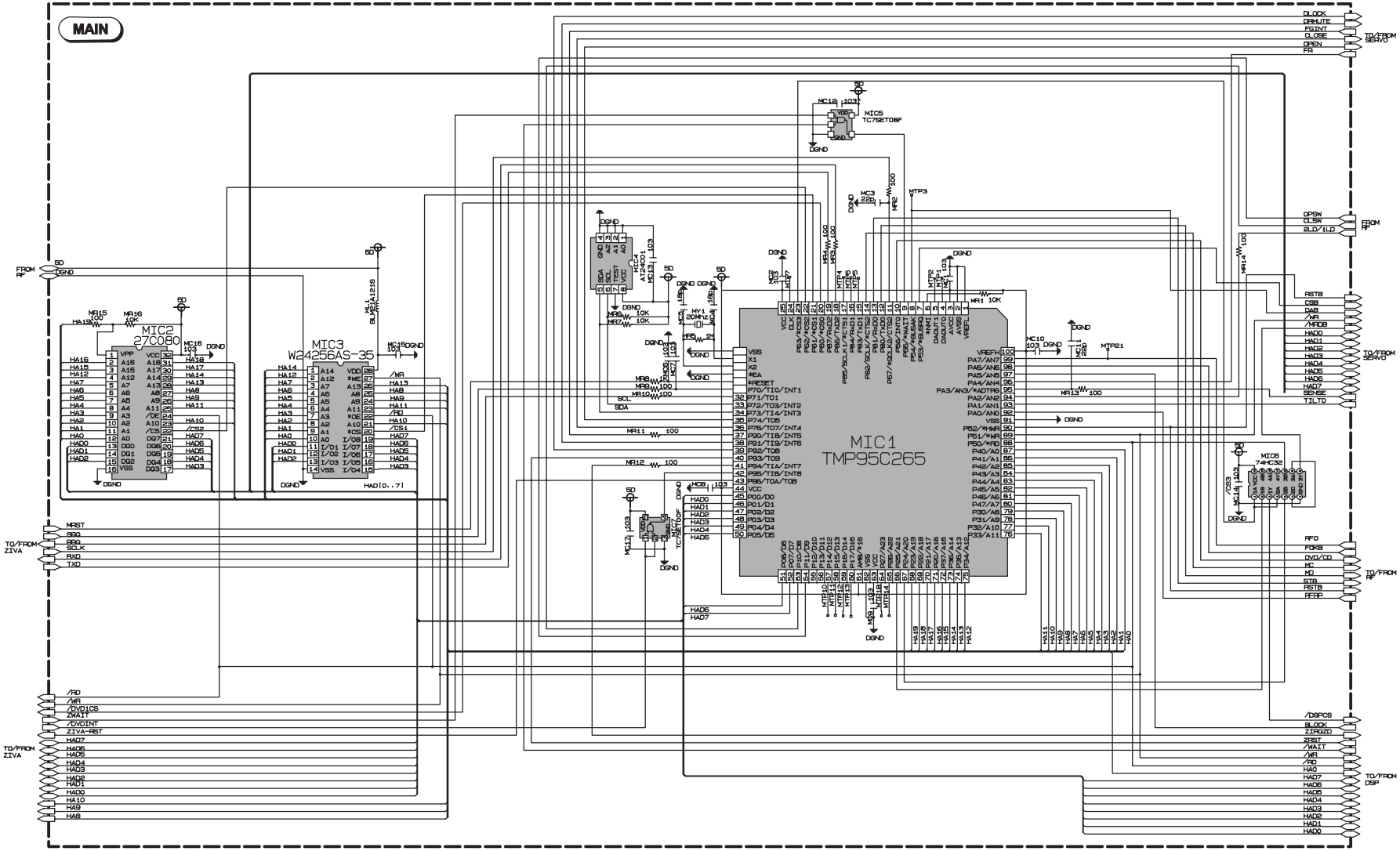

MIC1 (TMP95C265)

MODE / PIN	DVD		CD	
	PLAY	STOP	PLAY	STOP
1	0.0	0.0	0.0	0.0
2	0.0	0.0	0.0	0.0
3	4.9	4.9	4.9	4.9
4	0.0	0.0	0.0	0.0
5	0.0	0.0	0.0	0.0
6	4.9	4.9	4.9	4.9
7	2.5	4.9	4.9	4.9
8	2.5	4.9	4.9	4.9
9	2.5	2.5	4.9	4.9
10	4.9	4.9	0.0	0.0
11	2.5	4.9	2.5	4.9
12	2.5	0.0	0.0	0.0
13	2.5	0.0	0.0	0.0
14	2.5	4.9	4.9	4.9
15	4.9	4.9	4.9	4.9
16	0.0	0.0	0.0	0.0
17	4.9	4.9	4.9	4.9
18	2.5	4.9	2.5	4.9
19	2.5	4.9	2.5	4.9
20	2.5	2.5	2.5	2.5
21	2.5	2.5	2.5	2.5
22	2.5	2.5	2.5	2.5
23	2.5	2.5	2.5	2.5
24	2.5	2.5	2.5	2.5
25	4.9	4.9	4.9	4.9
26	0.0	0.0	0.0	0.0
27	2.5	2.5	2.5	2.5
28	2.5	2.5	2.5	2.5
29	0.0	0.0	0.0	0.0
30	4.9	4.9	4.9	4.9
31	0.0	0.0	0.0	0.0
32	2.5	4.9	2.5	4.9
33	4.9	4.9	4.9	4.9
34	4.9	4.9	4.9	4.9
35	0.0	0.0	0.0	0.0
36	4.9	4.9	4.9	4.9
37	2.5	4.9	2.5	4.9
38	0.0	0.0	0.0	0.0
39	4.9	0.0	0.0	0.0
40	4.9	4.9	4.9	4.9
41	2.5	2.5	2.5	2.5
42	2.5	2.5	2.5	2.5
43	4.9	4.9	4.9	4.9
44	4.9	4.9	4.9	4.9
45	2.5	2.5	2.5	2.5

MODE / PIN	DVD		CD	
	PLAY	STOP	PLAY	STOP
46	2.5	2.5	2.5	2.5
47	2.5	2.5	2.5	2.5
48	2.5	2.5	2.5	2.5
49	2.5	2.5	2.5	2.5
50	2.5	2.5	2.5	2.5
51	2.5	2.5	2.5	2.5
52	2.5	2.5	2.5	2.5
53	0.0	0.0	0.0	0.0
54	4.9	4.9	4.9	4.9
55	0.0	0.0	0.0	0.0
56	0.0	0.0	0.0	0.0
57	0.0	0.0	0.0	0.0
58	0.0	0.0	0.0	0.0
59	4.9	0.0	0.0	0.0
60	2.5	0.0	2.5	0.0
61	4.9	4.9	4.9	4.9
62	0.0	0.0	0.0	0.0
63	4.9	4.9	4.9	4.9
64	2.5	2.5	2.5	2.5
65	2.5	2.5	2.5	2.5
66	2.5	2.5	2.5	2.5
67	2.5	2.5	2.5	2.5
68	2.5	2.5	2.5	2.5
69	2.5	2.5	2.5	2.5
70	2.5	2.5	2.5	2.5
71	2.5	2.5	2.5	2.5
72	2.5	2.5	2.5	2.5
73	2.5	2.5	2.5	2.5
74	2.5	2.5	2.5	2.5
75	2.5	2.5	2.5	2.5
76	2.5	2.5	2.5	2.5
77	2.5	2.5	2.5	2.5
78	2.5	2.5	2.5	2.5
79	2.5	2.5	2.5	2.5
80	2.5	2.5	2.5	2.5
81	2.5	2.5	2.5	2.5
82	2.5	2.5	2.5	2.5
83	2.5	2.5	2.5	2.5
84	2.5	2.5	2.5	2.5
85	2.5	2.5	2.5	2.5
86	2.5	2.5	2.5	2.5
87	2.5	2.5	2.5	2.5
88	2.5	2.5	2.5	2.5
89	2.5	2.5	2.5	2.5
90	4.9	4.9	4.9	4.9

MODE / PIN	DVD		CD	
	PLAY	STOP	PLAY	STOP
91	0.0	0.0	0.0	0.0
92	3.2	0.4	3.7	1.1
93	0.0	0.0	0.0	0.0
94	4.9	4.9	4.9	4.9
95	2.5	4.9	4.9	4.9
96	0.0	4.9	0.0	4.9
97	4.9	0.0	4.9	0.0
98	0.0	4.9	0.0	4.9
99	2.8	1.9	2.7	1.8
100	4.9	4.9	4.9	4.9

MIC3 (KM681000C)

MODE / PIN	DVD		CD	
	PLAY	STOP	PLAY	STOP
1	0.0	0.0	0.0	0.0
2	1.3	1.3	1.2	1.9
3	2.0	2.0	1.4	0.9
4	2.3	2.7	1.7	1.7
5	2.3	2.4	2.8	2.4
6	2.6	2.6	2.5	2.8
7	2.4	2.4	2.4	2.2
8	2.5	2.5	2.5	2.5
9	2.4	2.4	2.4	2.3
10	2.4	2.4	2.4	2.4
11	2.3	2.3	2.3	2.4
12	2.1	2.2	2.0	2.2
13	1.7	1.7	1.8	1.6
14	2.4	2.5	2.5	2.4
15	1.9	1.8	2.0	2.0
16	0.0	0.0	0.0	0.0
17	1.8	1.8	2.1	2.0
18	1.6	1.6	0.0	1.5
19	2.0	2.0	2.4	2.0
20	2.2	2.2	2.0	2.0
21	1.8	1.8	2.1	1.8
22	4.7	4.7	4.9	4.9
23	2.6	2.7	2.7	2.8
24	2.4	2.4	2.5	2.4
25	1.9	1.9	1.7	2.0
26	3.5	3.5	3.4	3.5
27	2.8	2.8	2.7	2.9
28	2.7	2.6	2.2	2.0
29	5.0	5.0	5.0	5.0
30	5.0	5.0	5.0	5.0
31	3.0	3.0	2.0	1.9
32	5.0	5.0	5.0	5.0

MIC2 (M27C801)

MODE / PIN	DVD		CD	
	PLAY	STOP	PLAY	STOP
1	0.0	0.0	0.0	0.0
2	1.3	1.4	1.2	1.9
3	2.7	2.7	2.0	1.9
4	2.4	2.7	1.7	1.7
5	2.3	2.4	2.8	2.4
6	2.7	2.6	2.5	2.8
7	2.4	2.4	2.4	2.2
8	2.6	2.5	2.5	2.5
9	2.4	2.4	2.4	2.3
10	2.4	2.4	2.4	2.4
11	2.3	2.4	2.3	2.3
12	2.1	2.2	2.0	2.2
13	1.7	1.7	1.8	1.6
14	2.5	2.6	2.5	2.4
15	1.8	1.8	2.0	2.0
16	0.0	0.0	0.0	0.0
17	1.8	1.8	2.1	2.0
18	1.6	1.6	1.5	1.5
19	2.0	2.0	2.3	2.0
20	2.2	2.2	2.0	2.0
21	1.8	1.8	2.1	1.8
22	1.1	1.1	1.2	1.0
23	2.6	2.6	2.8	3.0
24	2.4	2.4	2.5	2.4
25	1.9	1.9	1.7	2.0
26	3.5	3.5	3.3	3.3
27	2.8	2.8	2.7	2.9
28	2.7	2.6	2.3	2.0
29	2.2	2.1	1.4	1.0
30	1.8	2.2	2.2	1.5
31	0.0	0.0	1.3	0.6
32	5.0	5.0	5.0	5.0

MIC4 (KS24C021)

MODE / PIN	DVD		CD	
	PLAY	STOP	PLAY	STOP
1	0.0	0.0	0.0	0.0
2	0.0	0.0	0.0	0.0
3	0.0	0.0	0.0	0.0
4	0.0	0.0	0.0	0.0
5	5.0	5.0	5.0	5.0
6	5.0	5.0	5.0	5.0
7	0.0	0.0	0.0	0.0
8	5.0	5.0	5.0	5.0

DISPLAY & CONTROL SCHEMATIC DIAGRAM - SCHEMA DES CIRCUITS COMMANDES/AFFICHAGES - SCHALTBILD BEDIENTEIL/DISPLAY - SCHEMA DEI CIRCUITI DISPLAY E COMANDI - ESQUEMA DE LOS CIRCUITOS MANDOS/VISUALIZADOR

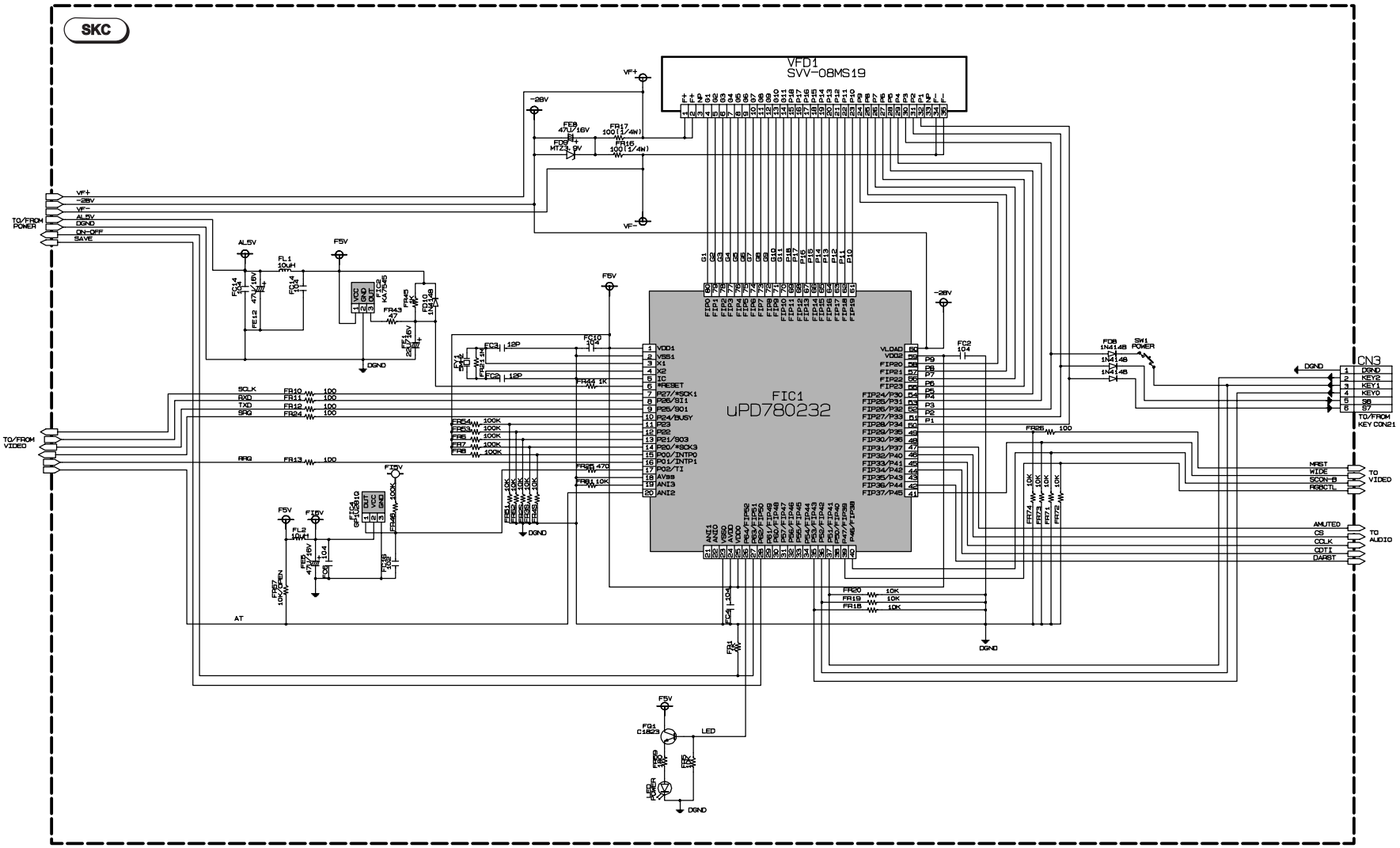

FIC1 (uPD780232)

MODE / PIN	DVD		CD	
	PLAY	STOP	PLAY	STOP
1	5.0	5.0	5.0	5.0
2	0.0	0.0	0.0	0.0
3	2.3	2.3	2.3	2.3
4	4.4	4.4	4.4	4.4
5	0.0	0.0	0.0	0.0
6	5.0	5.0	5.0	5.0
7	4.9	4.9	4.9	4.9
8	5.0	5.0	5.0	5.0
9	0.0	0.0	0.0	0.0
10	0.0	0.0	0.0	0.0
11	0.0	0.0	0.0	0.0
12	0.0	0.0	0.0	0.0
13	0.0	0.0	0.0	0.0
14	4.5	4.5	4.5	4.5
15	1.5	1.5	1.5	1.5
16	5.0	5.0	5.0	5.0
17	5.0	5.0	5.0	5.0
18	0.0	0.0	0.0	0.0
19	0.0	0.0	0.0	0.0
20	0.0	0.0	0.0	0.0
21	0.0	0.0	0.0	0.0
22	0.0	0.0	0.0	0.0
23	0.0	0.0	0.0	0.0
24	5.0	5.0	5.0	5.0
25	5.0	5.0	5.0	5.0
26	0.0	0.0	0.0	0.0
27	4.7	4.7	4.7	4.7
28	4.9	4.9	4.9	4.9
29	4.5	4.5	4.5	4.5
30	4.5	4.5	4.5	4.5
31	4.5	4.5	4.5	4.5
32	4.5	4.5	4.5	4.5
33	4.5	4.5	4.5	4.5
34	4.5	4.5	4.5	4.5
35	0	0	0	0
36	0	0	0	0
37	0	0	0	0
38	0	0	0	0
39	0	0	0	0
40	0	0	0	0
41	0	0	0	0
42	4.9	4.9	4.9	4.9
43	5.0	5.0	5.0	5.0
44	4.9	4.9	4.9	4.9
45	4.9	4.9	4.9	4.9

MODE / PIN	DVD		CD	
	PLAY	STOP	PLAY	STOP
46	4.9	4.9	4.9	4.9
47	0.0	4.9	0.0	4.9
48	0.0	4.9	0.0	4.9
49	0.0	0.0	0.0	0.0
50	0.0	0.0	0.0	0.0
51	-28.0	-23.7	-28.0	-23.7
52	-28.0	-23.7	-28.0	-23.7
53	-29.0	-23.7	-29.0	-23.7
54	-29.0	-23.7	-29.0	-23.7
55	-29.0	-23.7	-29.0	-23.7
56	-28.0	-23.7	-28.0	-23.7
57	-29.0	-23.7	-29.0	-23.7
58	-29.0	-23.7	-29.0	-23.7
59	3.5	4.9	3.5	4.9
60	-29.0	-28.3	-29.0	-28.3
61	-27.0	-26.6	-27.0	-26.6
62	-26.0	-23.3	-26.0	-23.3
63	-27.5	-26.6	-27.5	-26.6
64	-27.5	-26.6	-27.5	-26.6
65	-27.5	-26.6	-27.5	-26.6
66	-26.6	-23.7	-26.6	-23.7
67	-27.5	-26.6	-27.5	-26.6
68	-27.5	-26.6	-27.5	-26.6
69	-27.5	-26.6	-27.5	-26.6
70	-26.3	-23.7	-26.3	-23.7
71	-26.3	-23.7	-26.3	-23.7
72	-26.3	-23.3	-26.3	-23.3
73	-26.3	-23.7	-26.3	-23.7
74	-26.3	-23.7	-26.3	-23.7
75	-26.3	-23.7	-26.3	-23.7
76	-26.3	-23.7	-26.3	-23.7
77	-26.3	-23.7	-26.3	-23.7
78	-26.3	-23.7	-26.3	-23.7
79	-26.3	-23.7	-26.3	-23.7
80	-26.3	-23.7	-26.3	-23.7

AIC1 (AK4393)

MODE / PIN	DVD		CD	
	PLAY	STOP	PLAY	STOP
1	0.0	0.0	0.0	0.0
2	3.2	3.2	3.2	3.2
3	1.6	1.6	1.6	1.6
4	3.0	3.0	3.0	3.0
5	1.6	1.6	1.6	1.6
6	1.3	0.0	1.3	0.0
7	1.6	1.6	1.6	1.6
8	3.0	3.0	3.0	3.0
9	0.0	0.0	0.0	0.0
10	3.0	3.0	3.0	3.0
11	0.0	3.0	0.0	3.0
12	0.0	0.0	0.0	0.0
13	0.0	0.0	0.0	0.0
14	0.0	0.0	0.0	0.0
15	0.0	0.0	0.0	0.0
16	0.0	0.0	0.0	0.0
17	5.0	5.0	5.0	5.0
18	5.0	5.0	5.0	5.0
19	0.0	0.0	0.0	0.0
20	2.6	2.6	2.6	2.6
21	2.6	2.6	2.6	2.6
22	2.6	2.6	2.6	2.6
23	2.6	0.0	2.6	0.0
24	2.6	0.0	2.6	0.0
25	0.0	0.0	0.0	0.0
26	0.0	0.0	0.0	0.0
27	0.0	0.0	0.0	0.0
28	0.0	0.0	0.0	0.0

AUDIO SCHEMATIC DIAGRAM - SCHEMA DES CIRCUITS AUDIO - SCHALTBILD AUDIOSIGNAL - SCHEMA DEI CIRCUITI AUDIO - ESQUEMA DE LOS CIRCUITOS AUDIO

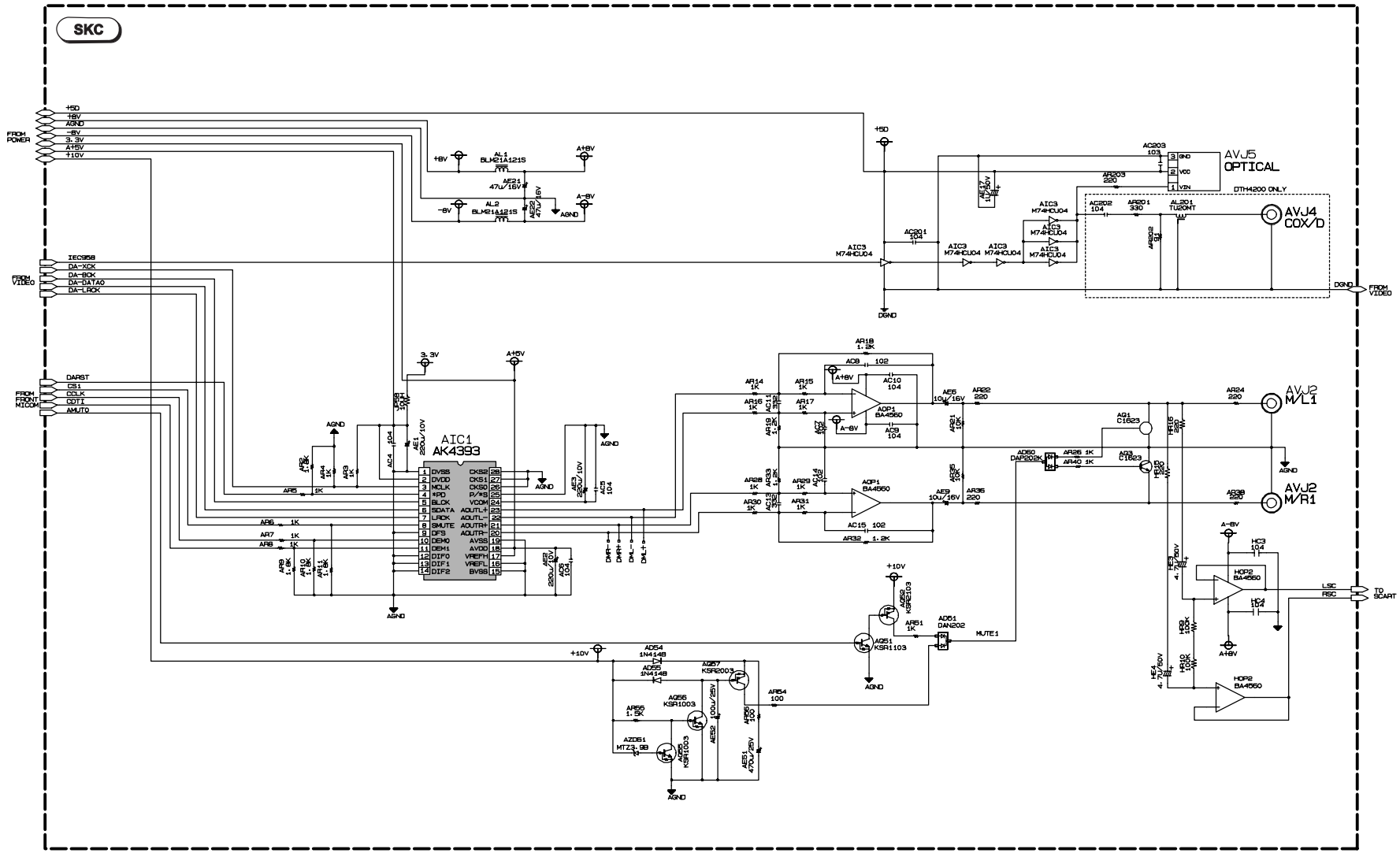

VIDEO DECODER SCHEMATIC DIAGRAM - SCHEMA DES DECODEURS VIDEO - VIDEO VERARBEITUNG - SCHEMA DEI CIRCUITI VIDEO - ESQUEMA DE LOS CIRCUITOS VÍDEO

DTH4000

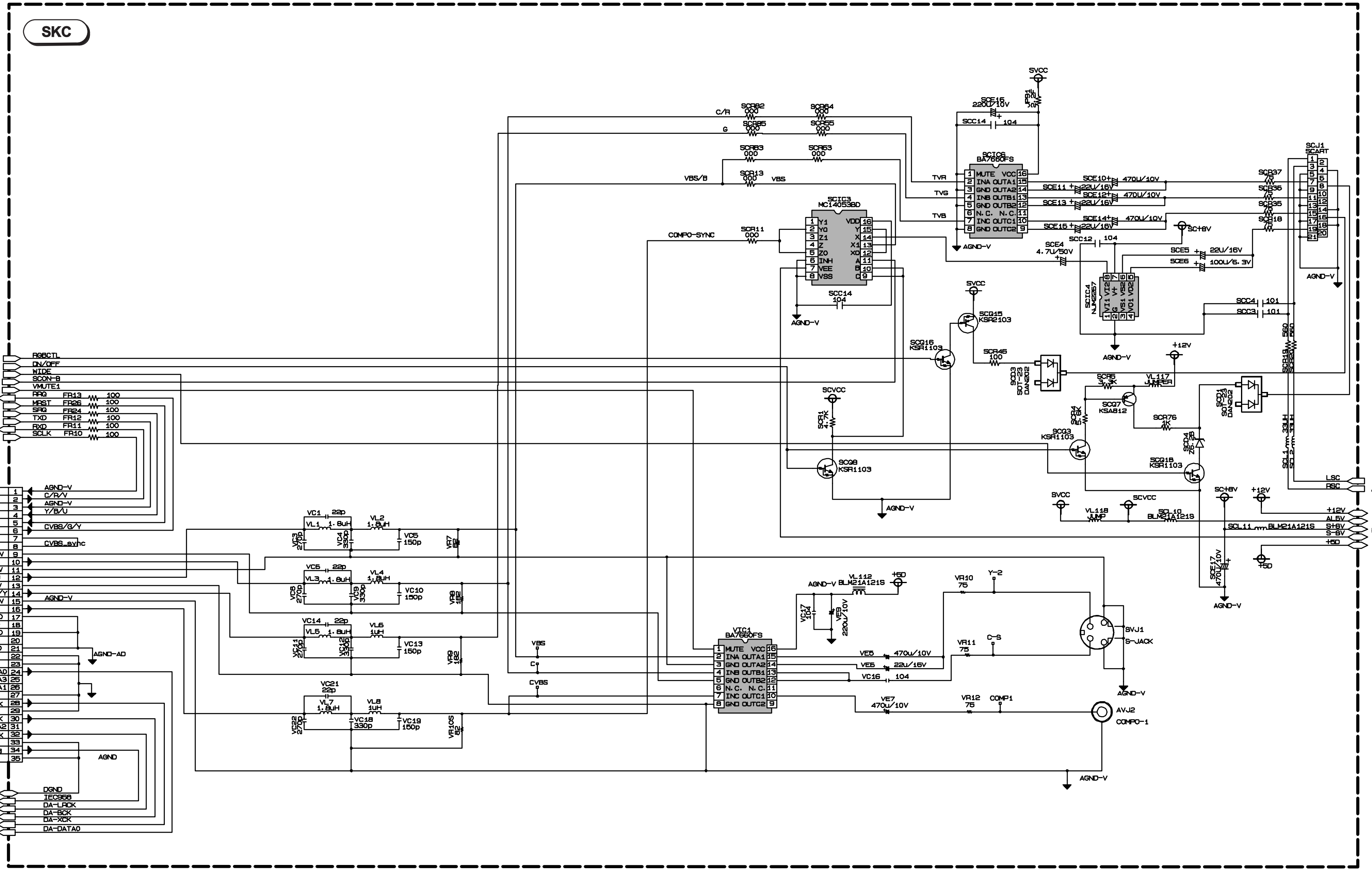

DTH4200

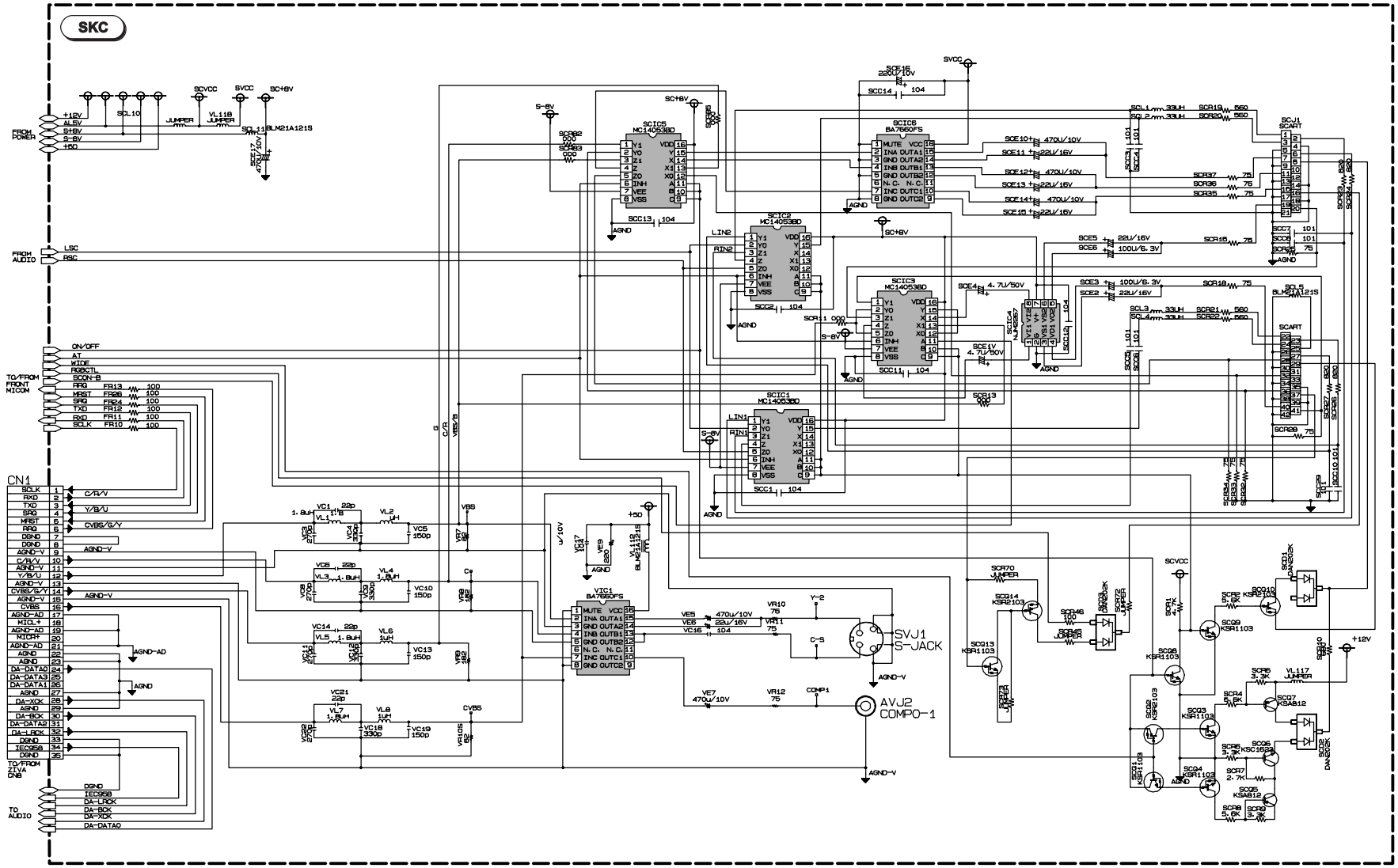

POWER SUPPLY SCHEMATIC DIAGRAM - SCHEMA DES CIRCUITS D'ALIMENTATIONS - SCHALTBILD NETZTEIL - SCHEMA DEI CIRCUITI DI ALIMENTAZIONE - ESQUEMA DE LOS CIRCUITOS DE ALIMENTACIÓN

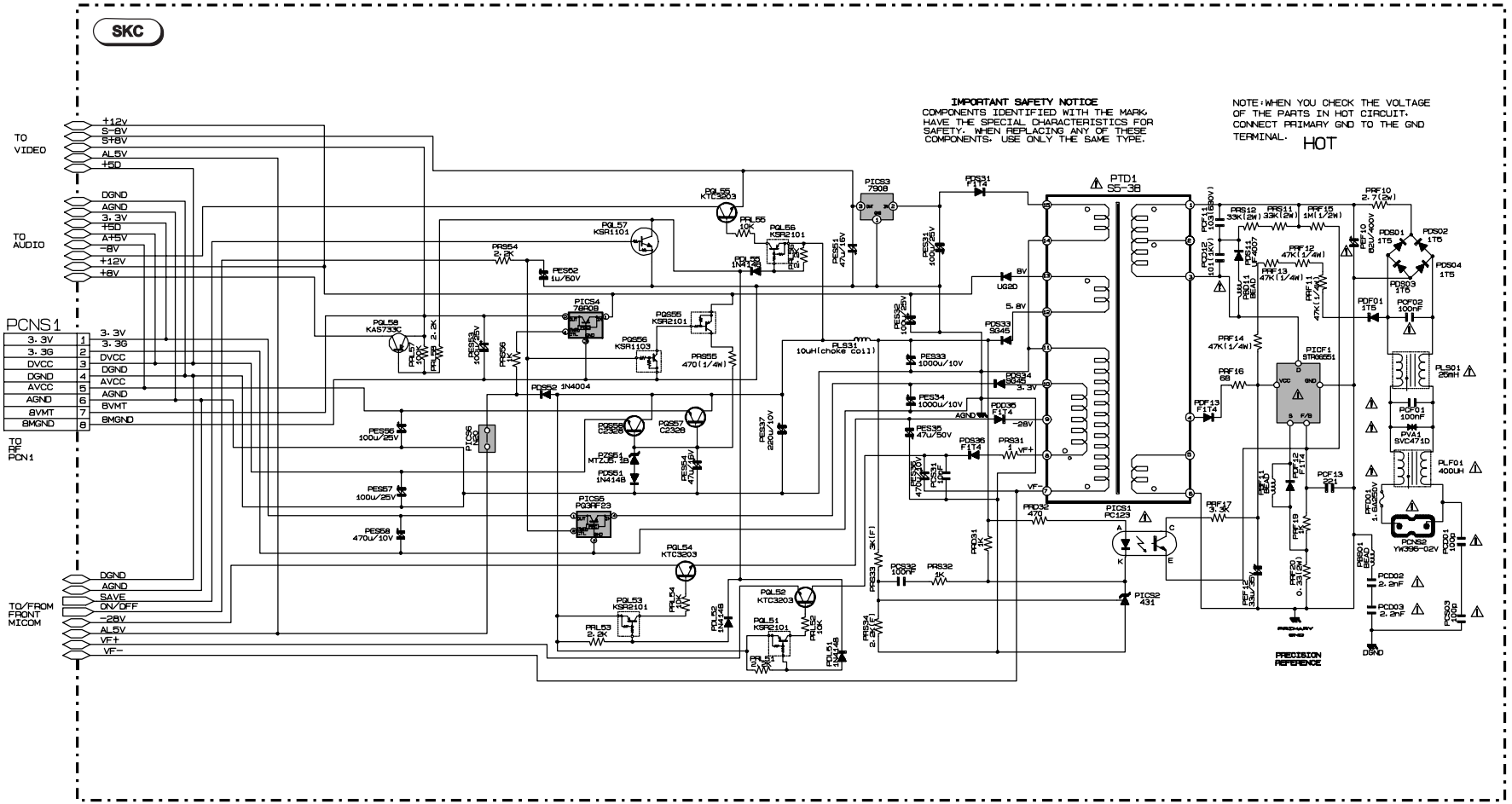

CD MOTOR CONTROL SCHEMATIC DIAGRAM - SCHEMA DE LA PLATINE COMMANDES MOTEURS CD - CD WECHSLER-MOTOR SCHALTBILD - SCHEMA DELLA PIASTRA COMANDI MOTORI CD - ESQUEMA DE LA PLATINA MANDOS MOTORES CD

DTH4000

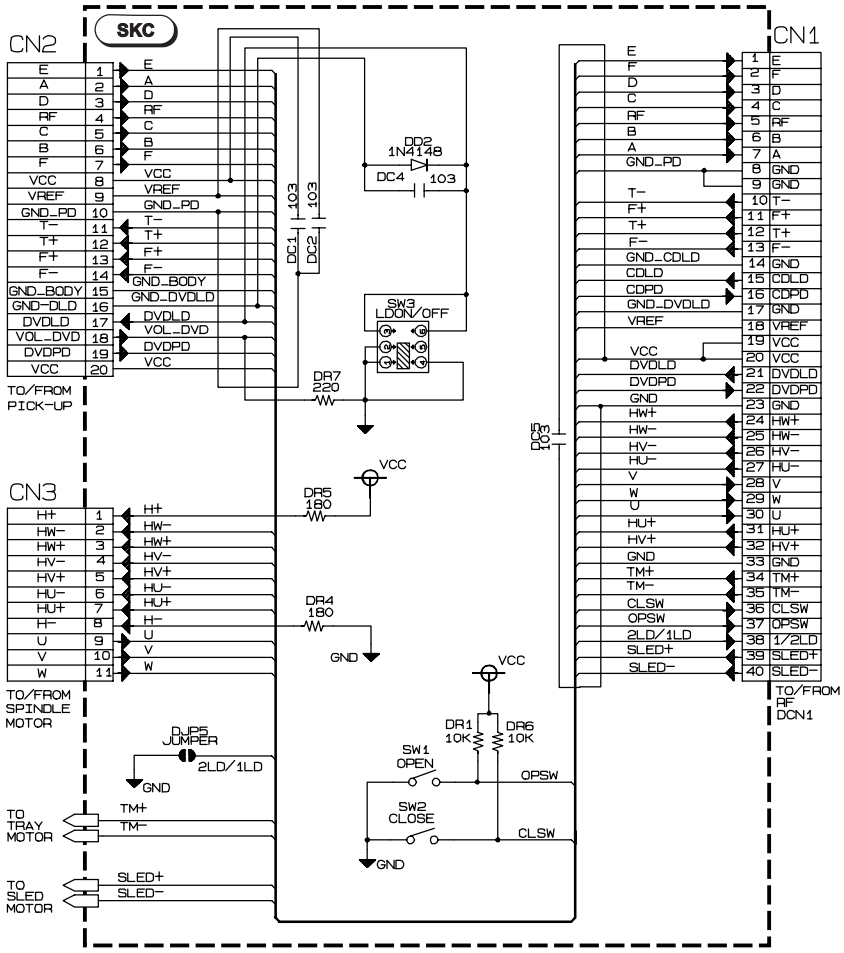

DTH4200 / DTH4500

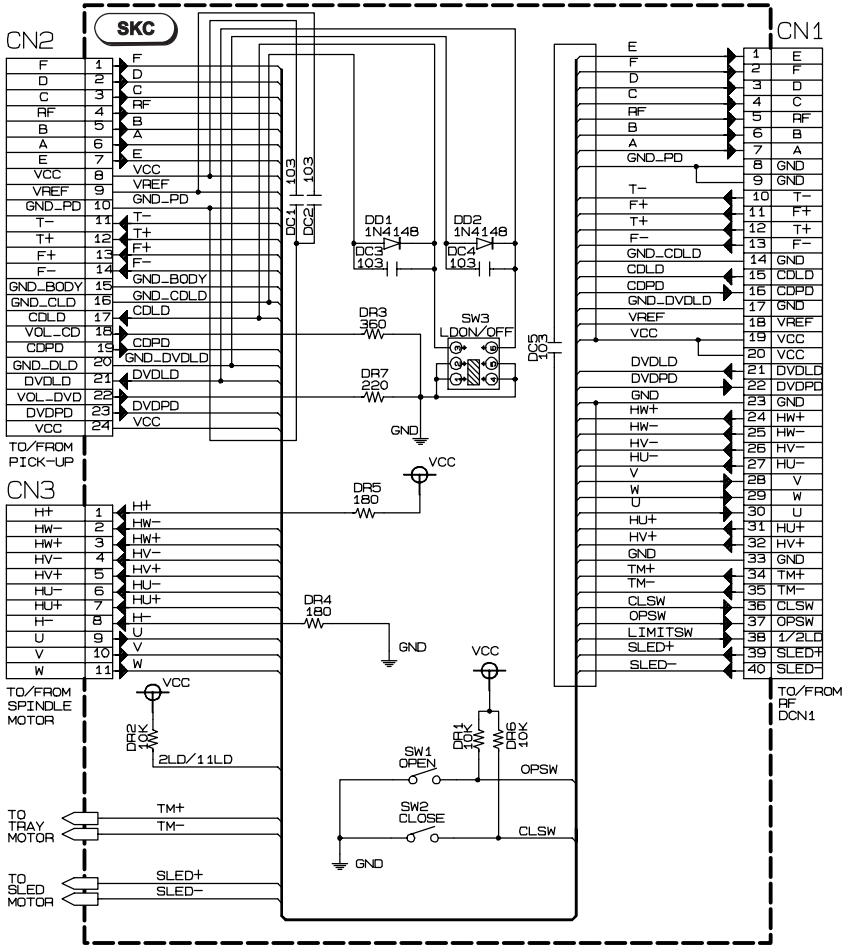

KEYBOARD SCHEMATIC DIAGRAM - SCHEMA DES CIRCUITS COMMANDES - SCHALTBILD BEDIENTEIL - SCHEMA DEI CIRCUITI TASTIERA - ESQUEMA DE LOS CIRCUITOS MANDOS

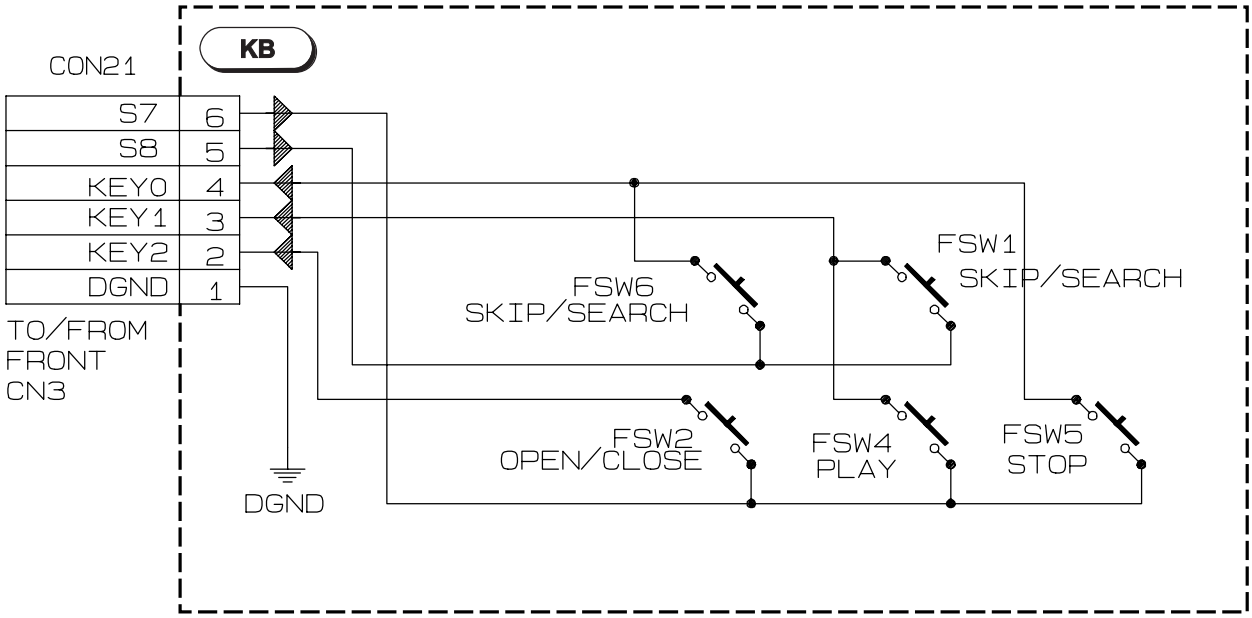

KEYBOARD CIRCUIT BOARDS - CIRCUITS IMPRIMES PLATINES COMMANDES - LETERPLATTE BEDIENTEIL - PIASTRE TASTIERA - PLATINAS MANDOS

COMPONENT SIDE - COTÉ COMPOSANTS - BESTÜCKUNGSSEITE - LATO COMPONENTI - LADO COMPONENTES

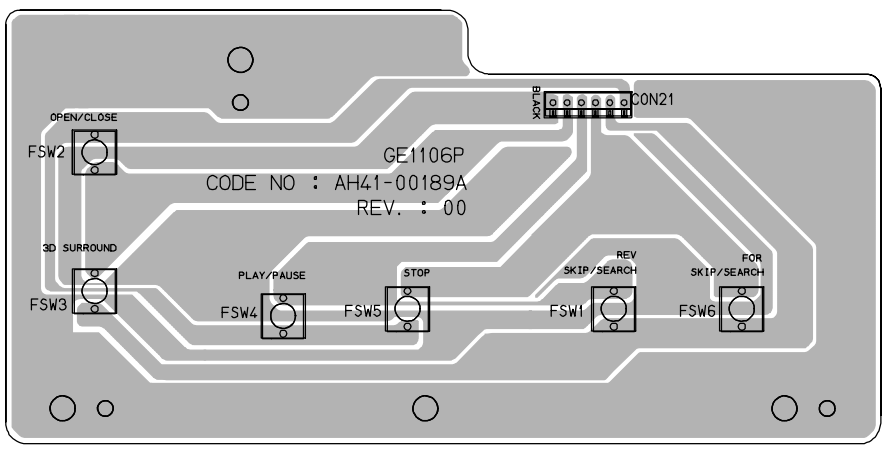

CD MOTOR CONTROL CIRCUIT BOARD -
CIRCUIT IMPRIME DE LA PLATINE COMMANDES MOTEURS CD -
CD WECHSLER-MOTOR LETERPLATTE -
PIASTRE COMANDI MOTORI CD - PLATINAS MANDOS MOTORES CD

DTH4000

COMPONENT SIDE - COTÉ COMPOSANTS -
BESTÜCKUNGSSEITE -
LATO COMPONENTI - LADO COMPONENTES

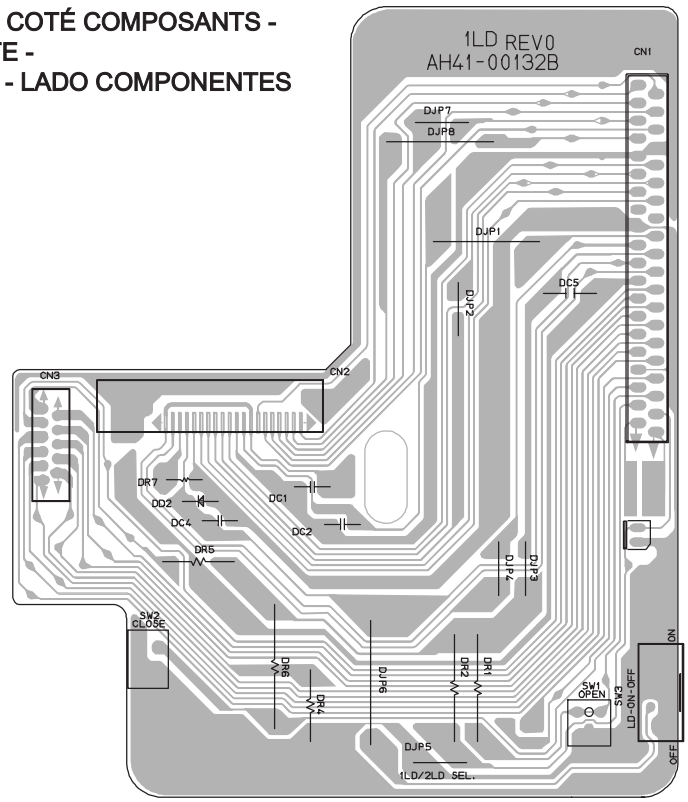

DTH4200

COMPONENT SIDE - COTÉ COMPOSANTS -
BESTÜCKUNGSSEITE -
LATO COMPONENTI - LADO COMPONENTES

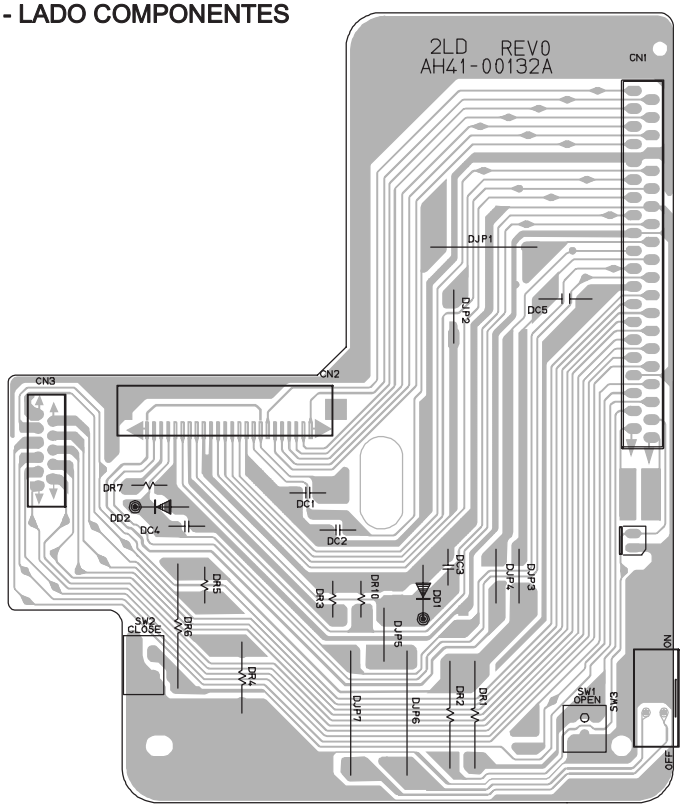

JACK PRINTED CIRCUIT BOARD - CIRCUIT IMPRIME PLATINE PRISES - LEITERPLATTE ANSCHLUSS - PIASTRA PRESE - PLATINA TOMAS

SOLDER SIDE - COTÉ CUIVRE - LÖTSEITE -
LATO SALDATURE - LADO DEL COBRE

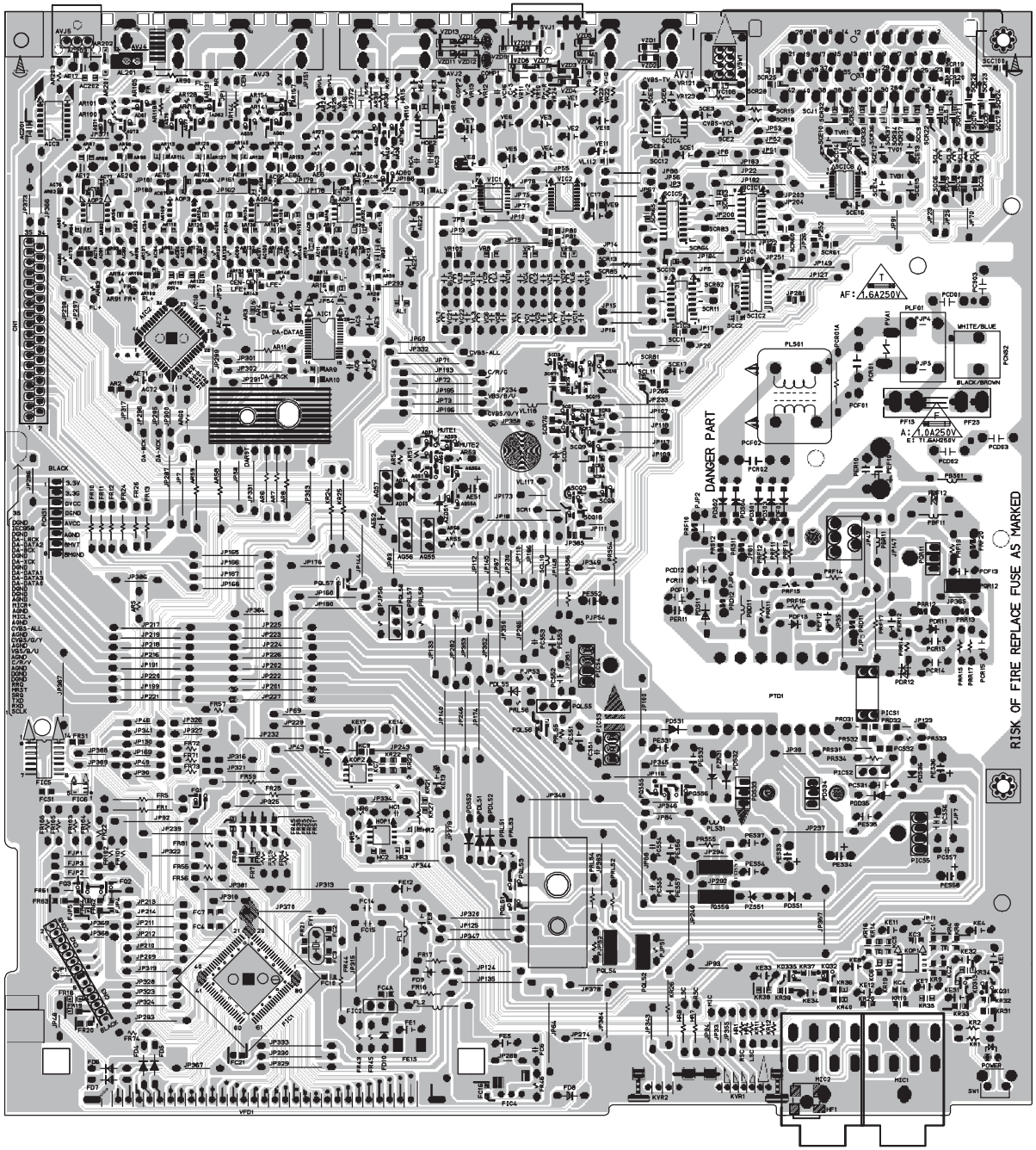

JACK PRINTED CIRCUIT BOARD - CIRCUIT IMPRIME PLATINE PRISES - LEITERPLATTE ANSCHLUSS - PIASTRA PRESE - PLATINA TOMAS

COMPONENT SIDE - COTÉ COMPOSANTS -
BESTÜCKUNGSSEITE -
LATO COMPONENTI - LADO COMPONENTES

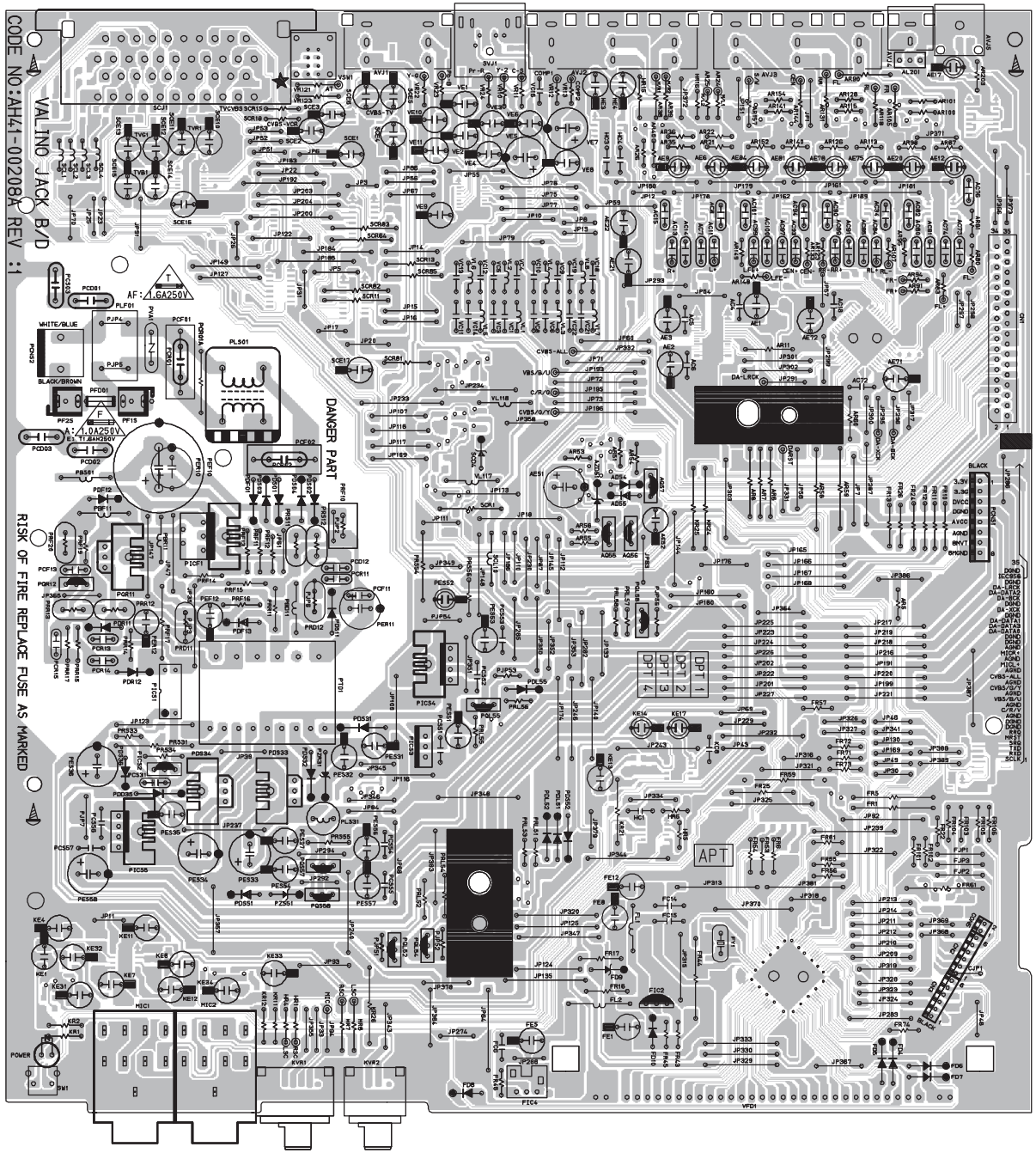

MAIN PRINTED CIRCUIT BOARD - CIRCUIT IMPRIME PLATINE PRINCIPALE - GRUNDPLATTE - PIASTRA PRINCIPALE - PLATINA PRINCIPAL

COMPONENT SIDE - COTÉ COMPOSANTS - BESTÜCKUNGSSEITE - LATO COMPONENTI - LADO COMPONENTES

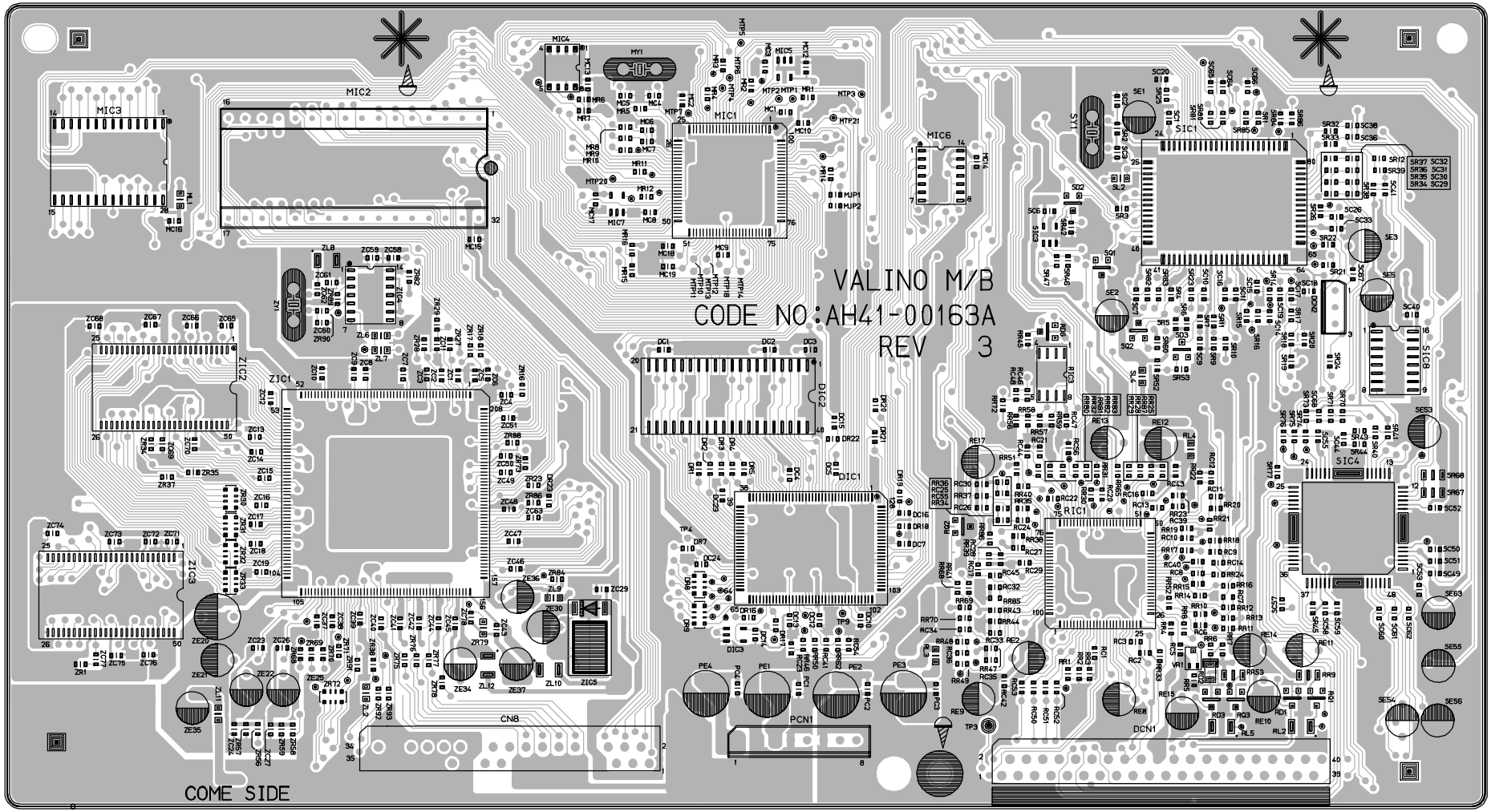

MAIN PRINTED CIRCUIT BOARD - CIRCUIT IMPRIME PLATINE PRINCIPALE - GRUNDPLATTE - PIASTRA PRINCIPALE - PLATINA PRINCIPAL
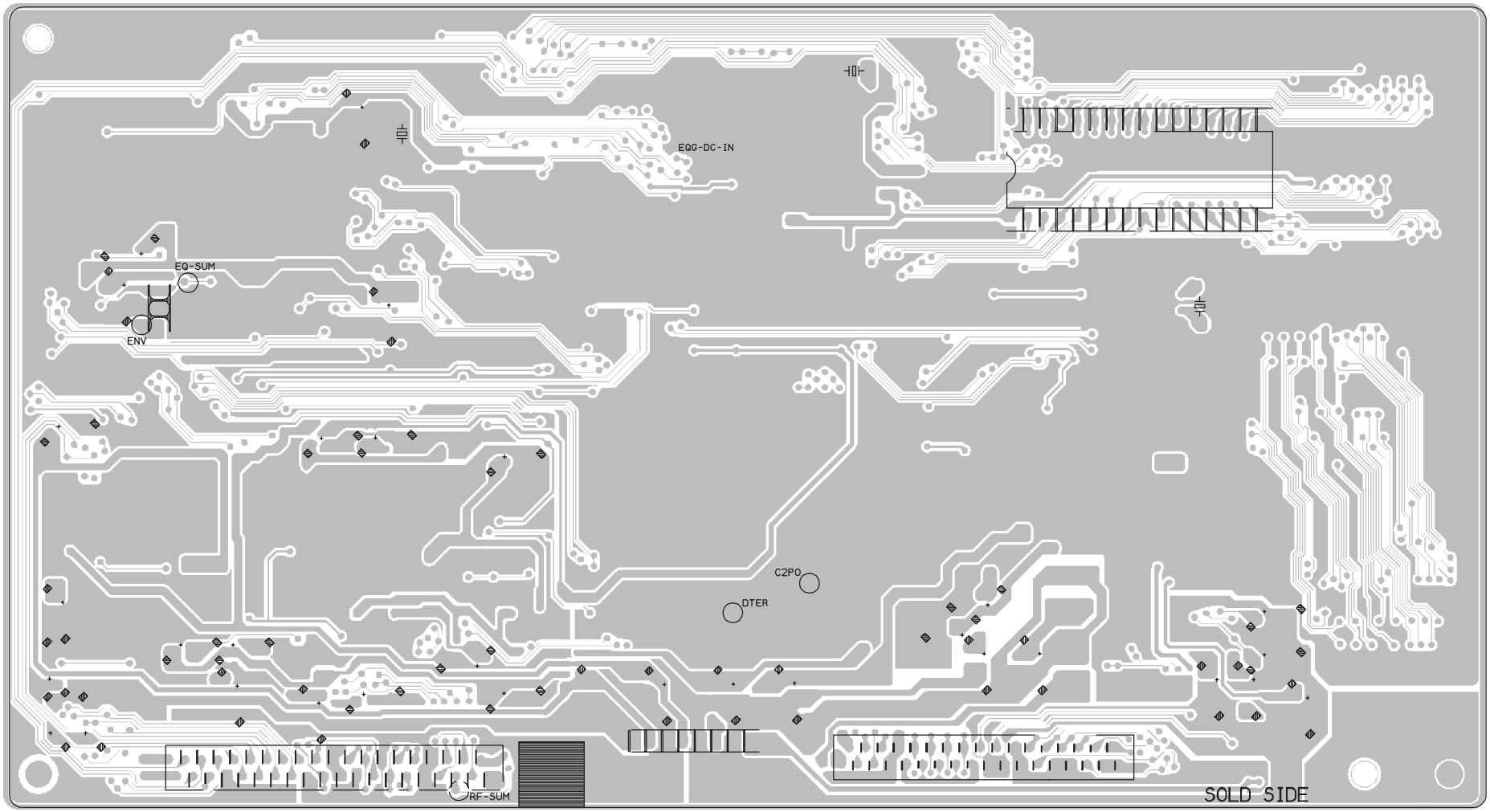
SOLDER SIDE - COTÉ CUIVRE - LÖTSEITE - LATO SALDATURE - LADO DEL COBRE